NIPPONIA

ENZO110

Negro Mate

Blanco

Rojo Mate

SPARE PARTS CATALOGUE

ver. 24.09

E-1	CYLINDER HEAD COVER	ENZO110

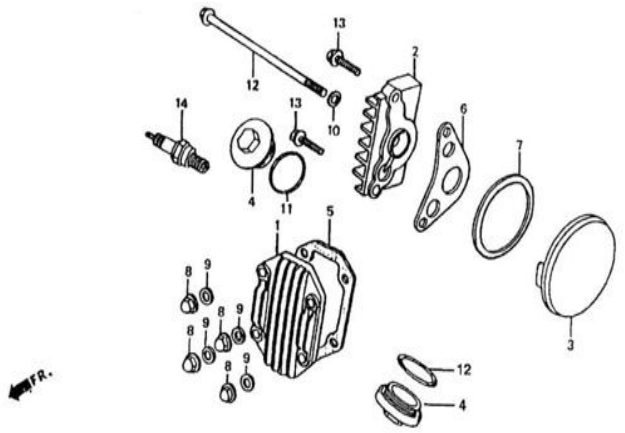

No	Part No	Part description	Q'ty	Notes	Frame No
1	EG001-50006	COVER, CYLINDER HEAD	1		
2	EG001-50008	COVER, R.CYLINDER HEAD SIDE	1		
3	EG001-50007	COVER, L.CYLINDER HEAD SIDE	1		
4	EF001-50009	CAP, TAPPET ADJUSTING HOLE	2		
5	EG001-50014E	GASKET,CYLINDER HEAD COVER	1		
6	EF001-50023E	GASKET, R.CYLINDER HEAD SIDE COVER	1		
7	EF001-50016C	GASKET, L.CYLINDER HEAD SIDE COVER	1		
8	EG001-50017A	NUT, CAP 6	4		
9	EG001-50031	WASHER A,SEALING	4		
10	EG001-50022	WASHER,SEALING,6.5	1		
11	EF001-50019	O-RING 30.8×3.2	2		
12	EG001-50021	BOLT,FLANGE 6×110	1		
13	EG001-50020	BOLT,FLANGE 6×20	2		
14	ED001-03100-0051	PLUG, SPARK	1		

E-2	CYLINDER HEAD	ENZO110

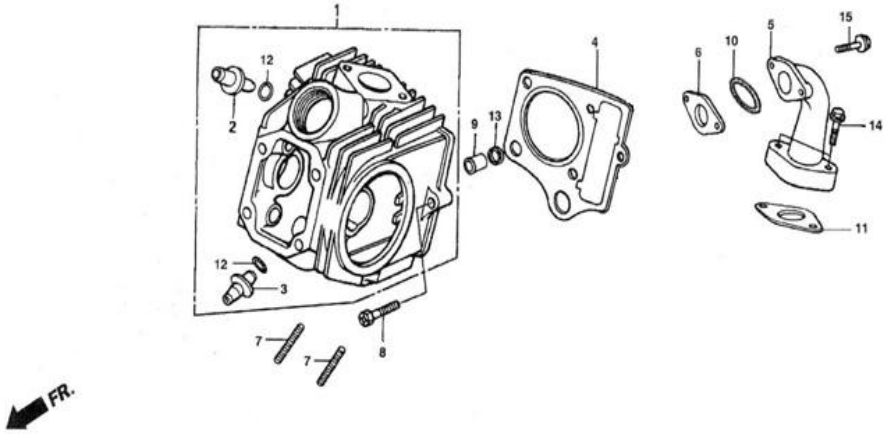

No	Part No	Part description	Q'ty	Notes	Frame No
1	EG001-50101	HEAD COMP., CYLINDER	1		
2		GUIDE, INTAKE VALVE	1		
3		GUIDE, EXHAUST VALVE	1		
4	EH003-504001	GASKET, CYLINDER HEAD	1		
5	VGA001-056001	PIPE, INTAKE	1		
6	ZFA001-050051	GASKET,INSULATOR	1		
7	NEI001-50037	BOLT,STUD	2		
8	EG001-50026	BOLT,FLANGE,6×23	1		
9	EF001-50021	COLLAR	1		
10	ZFA001-05004	O-RING	1		
11	ZFA001-05006	GASKET, INTAKE PIPE	1		
12		O-RING 9×1.6	2		
13	EF001-50022	SEAL,SQUARE	1		
14	VGA001-05005	BOLT FLANGE 6×25	2		
15	W5324011	BOLT 6×30	2		

E-3	CAMSHAFT / VALVE	ENZO110

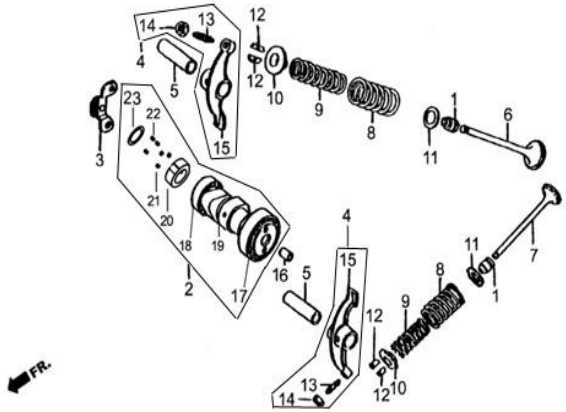

No	Part No	Part description	Q'ty	Notes	Frame No
1	EF001-50012	SEAL,VALVE STEM	2		
2	EG001-50200-0050	CAMSHAFT	1		
3	EG001-50500	PLATE COMP. STOPPER	1		
4	EG001-50300-0050	VALVE ROCKER ARM	2		
5	EF001-50013	SHAFT, VALVE ROCKER ARM	2		
6	EG001-50002-0050	VALVE, INTAKE	1		
7	EG001-50003-0050	VALVE, EXHAUST	1		
8	EF001-50005	SPRING, VALVE OUTER	2		
9	EF001-50004	SPRING, VALVE INNER	2		
10	EF001-50015	SEAT, VALVE SPRING INNER	2		
11	EG001-50018-0004	SEAT, VALVE SPRING OUTER	2		
12	EF001-50010	COTTER, VALVE	4		
13		SCREW, TAPPET ADJUSTING	2		
14		NUT, TAPPET ADJUSTING	2		
15	EG001-50301	ARM, VALVE ROCKER	2		
16	EG001-53014	PIN,STOPPER 8×12	1		
17	W5900011	BEARING 6902Z	1		
18	W5900012	BEARING 6905	1		
19	EG001-50201	CAMSHAFT	1		
20	EG001-50202	CAM,CLUTCH	1		
21	EG001-50203	WASHER	1		
22	EG001-50204	ROLLER	3		
23	EG001-50205	SPRING,ROLLER	3		

E-4	CYLINDER	ENZO110

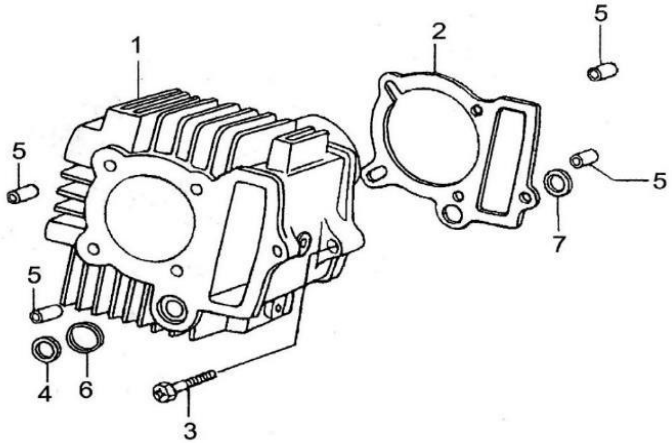

No	Part No	Part description	Q'ty	Notes	Frame No
1	EH003-50001	CYLINDER	1		
2	EH003-50011B	GASKET,CYLINDER	1		
3	EG001-50026	BOLT FLANGE 6×23	1		
4	EG001-50028	WASHER	1		
5	EG001-50025	PIN,DOWER,8×14	4		
6	EF001-50029	SEAL,SQUARE	1		
7	EG001-50029	RUBBER RING	1		

E-5	CAM CHAIN / TENSIONER	ENZO110

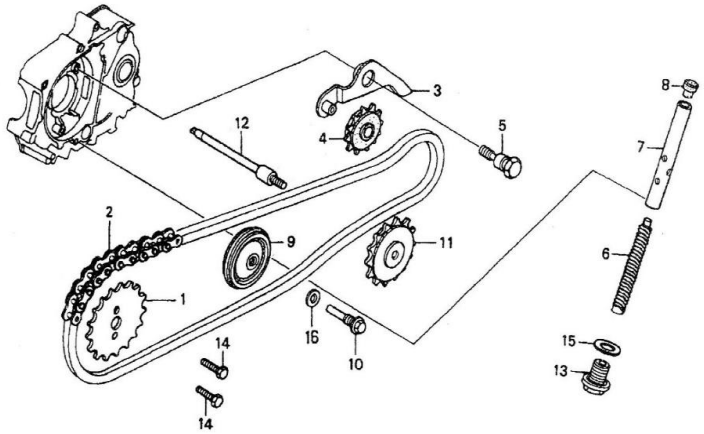

No	Part No	Part description	Q'ty	Notes	Frame No
1	EG001-51001-0052	SPROCKET, CAM	1		
2	EF001-51002-0050	CHAIN, CAM	1		
3	EG001-51009	ARM COMP.,CAM CHAIN TENSIONER	1		
4	EG001-51005-0050	ROLLER,CAM CHAIN TENSIONER	1		
5	EF001-51010	PIVOT,CAM CHAIN TENSIONER	1		
6	EG001-51008	SPRING,CAM CHAIN TENSIONER	1		
7	EG001-51100-0050	ROD COMP.,CAM CHAIN TENSIONER PUSH	1		
8	EF001-51012	HEAD,CAM CHAIN TENSIONER PUSH ROD	1		
9	EG001-51004-0050	ROLLER,CAM CHAIN GUIDE	1		
10	EG001-51011	PIN,CAM CHAIN GUIDE ROLLER	1		
11	EG001-51003	SPROCKET,CAM CHAIN GUIDE	1		
12	EF001-51014	SPINDLE,CAM CHAIN GUIDE	1		
13	EF001-510131	BOLT,SEALING	1		
14	EG001-51010	BOLT,5×12	2		
15	EF001-53024	WASHER,SEALING	1		
16	EF001-50028	WASHER	1		

E-6	RIGHT CRANKCASE COVER	ENZO110

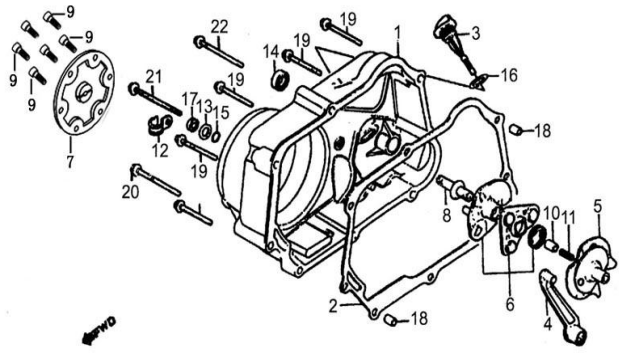

No	Part No	Part description	Q'ty	Notes	Frame No
1	EH001-53501B-EL	COVER COMP., R. CRANKCASE	1		
2	EG001-53005B	GASKET,R.CRANKCASE	1		
3	EG001-53502	GAUGE, OIL LEVEL	1		
4	EF999-54500A-0051	LEVER,CLUTCH	1		
5	EF999-544001	PLATE ,CLUTCH CAM	1		
6	EF999-543001	ROD,CLUTCH PUSH	1		
7	EH050-53503A-EL50	COVER TRADE MARK	1		
8	EF999-54008A	BOLT,CLUTCH ADJUSTING	1		
9	EH050-53505	SCREW M6×14	6		
10	EF001-56408	THROUGH,OIL	1		
11	EF001-56409	SPRING,OIL THROUGH	1		
12	EG001-53008	CLIP,HIGH-TENSION CABLE	1		
13	EG001-54021	WASHER	1		
14	EF001-53008-0050	OIL SEAL	1		
15	EG001-54020	O-RING	1		
16	NEI001-53505	O-RING	1		
17	EG001-54022	NUT HEX	1		
18	EG001-53014	PIN DOWEL	2		
19	EF001-53019	BOLT FLANGE 6×40	5		
20	EG001-53009	BOLT,FLANGE 6×80	1		
21	EG001-53009	BOLT,FLANGE 6×80	1		
22	EF001-53012	BOLT,FLANGE 6×65	1		

E-7.1	CLUTCH	ENZO110

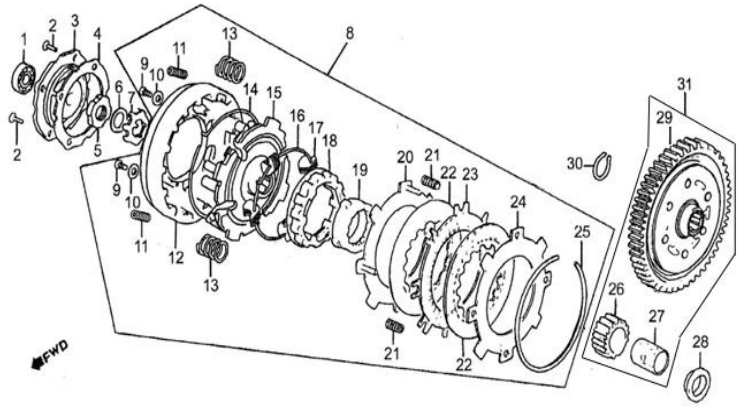

No	Part No	Part description	Q'ty	Notes	Frame No
1	W5900017	BEARING,RADIAL BALL	1		
2	EF999-56007	SCREW	4		
3	EF999-56005	COVER,CLUTCH OUTER	1		
4	EF999-56006	GASKET,CLUTCH OUTER COVER	1		
5	EF001-56405	NUT LOCK	1		
6	EF001-56407	WASHER LOCK	1		
7	EF001-56406	WASHER LOCK	1		
8	EH064-56300C-0050	CLUTCH	1		
9		SCREW, PAN	4		
10		WASHER	4		
11		SPRING,CLUTCH DAMPER	4		
12		OUTER,CLUTCH	1		
13		SPRING,CLUTCH	4		
14		RING,CLUTCH WEIGHT STOPPER	1		
15		PLATE,DRIVE	1		
16		RING,CLUTCH WEIGHT CENTER	1		
17		WEIGHT,CLUTCH	28		
18		CENTER,CLUTCH	1		
19		OUTER,DRIVER GEAR	1		
20		PLATE A,CLUTCH	1		
21		SPRING,CLUTCH FREE	4		
22		DISK A,CLUTCH FRICTION	2		
23		DISK B,CLUTCH FRICTION	1		

E-7.2	CLUTCH	ENZO110

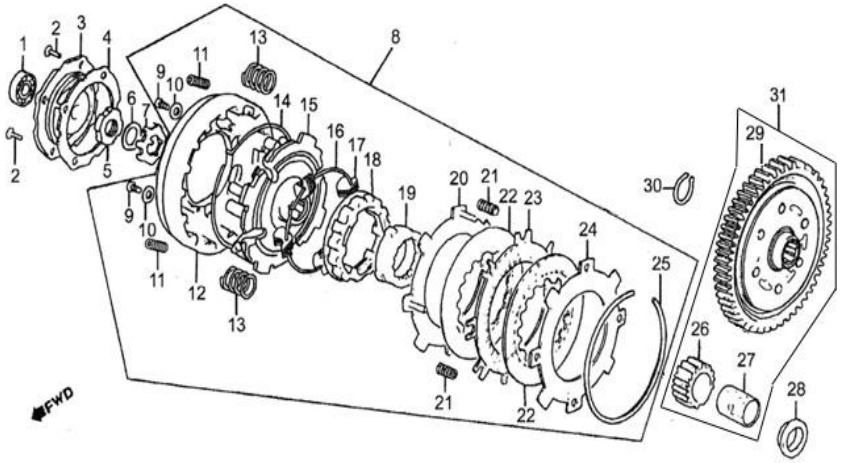

24		PLATE B,CLUTCH	1		
25		SET RING	1		
26	EF999-56001-0050	GEAR,DRIVE	1		
27	EF001-56402	GUIDE,GLUTCH CENTER	1		
28	EF001-56401	COLLAR	1		
29	EF999-56500-0061	GEAR,PRIMARY DRIVE	1		
30	EF001-55001	CIRCLIP,EXTERNAL	1		
31	EF999-56800-0052		1		

E-8	LEFT CRANKCASE COVER	ENZO110

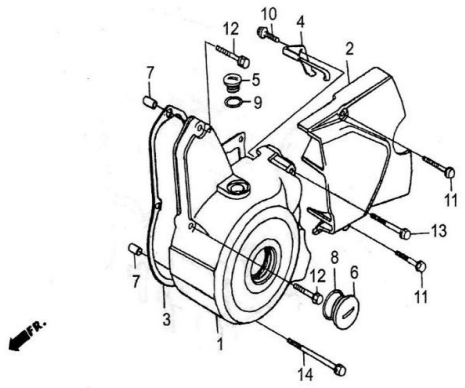

No	Part No	Part description	Q'ty	Notes	Frame No
1	EH001-534011-EL	COVER,L.CRANKCASE	1		
2	VHC997-05001-EL	COVER,L.CRANKCASE REAR	1		
3	EG001-53006	GASKET,L.CRANKCASE COVER	1		
4	EH001-53405	CLAMPER,A.C.GENERATOR	1		
5	EI997-53406-EL	CAP,A.C.GENERATOR	1		
6	EG001-53403-EL	PLUG,MAGNETO SCREW	1		
7	EG001-53014	PIN,DOWEL 8×12	2		
8	EG001-53406	O-RING,27×2.0	1		
9	EG001-53405	O-RING	1		
10	EG001-53407	BOLT,FLANGE 6×16	1		
11	ZFA001-05007	BOLT 6×28	2		
12	EG001-53012	BOLT,FLANGE 6×32	2		
13	EF001-53015	BOLT,FLANGE 6×50	1		
14	EG001-53010	BOLT,FLANGE 6×70	1		

E-9	GENERATOR	ENZO110

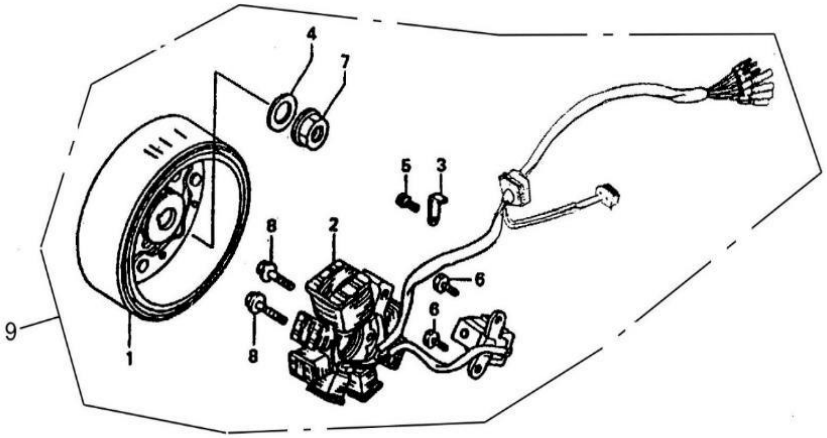

No	Part No	Part description	Q'ty	Notes	Frame No
1		FLYWHEEL COMP.	1		
2		STATOR COMP.	1		
3	EH001-53406	PLATE,PRESSURE	1		
4	EG001-52007A	WASHER	1		
5	W5322002	BOLT,5×10	1		
6	W5324001	BOLT,5×16	2		
7	EG001-52006A	NUT,FLANGE	1		
8	EI004-53015	BOLT,FLANGE,6×30	2		
9	EH092-84000A	GENERATOR	1		

E-10.1	CRANKCASE / OIL PUMP	ENZO110

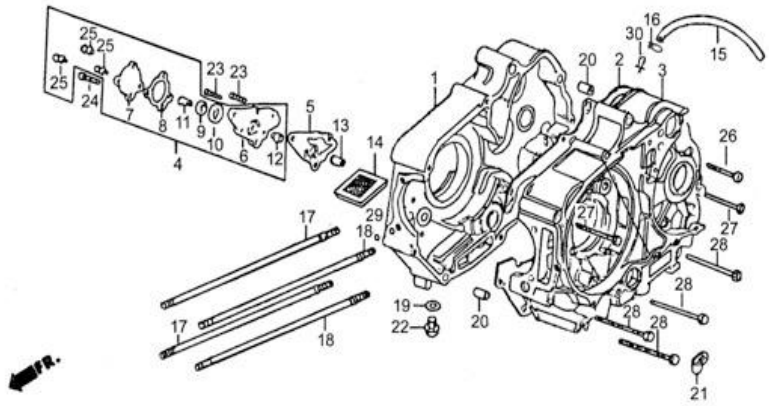

No	Part No	Part description	Q'ty	Notes	Frame No
1	EH003-53301	CRANKCASE COMP.	1		
2	EF001-53004B	GASKET,CRANKCASE	1		
3	EH003-53201	CRANKCASE COMP.,LEFT	1		
4	EH003-61	PUMP ASSY.,OIL	1		
5	EF001-61001	GASKET,PUMP BODY	1		
6		BODY,OIL PUMP	1		
7		COVER,OIL PUMP	1		
8		GASKET,OIL PUMP COVER	1		
9		ROTOR,OIL PUMP INNER	1		
10		ROTOR,OIL PUMP OUTER	1		
11		SHAFT,OIL PUMP	1		
12		PIN,OIL PUMP KNOCK	1		
13	EF001-61002	PIVOT, OIL PUMP	1		
14	EF001-53003	SCREEN,OIL PUMP	1		
15	EH001-53011A	TUBE,BREATHER	1		
16	EG001-53015	RING,LOCK C9	1		
17	EG001-53001-0050	BOLT A,CYLINDER STUD	2		
18	EG001-53002-0050	BOLT B,CYLINDER STUD	2		
19	EG001-53304A	PACKING,DRAIN COCK	1		
20	EI008-50033	PIN,KNOCK 10×14	2		
21	EG001-53011	CLIP, OVERFLOW PIPE	1		
22	EI997-53208-0050	BOLT,DRAIN PLUG,12×1.5	1		
23	W5313121	SCREW 6×16	2		

E-10.2	CRANKCASE / OIL PUMP	ENZO110

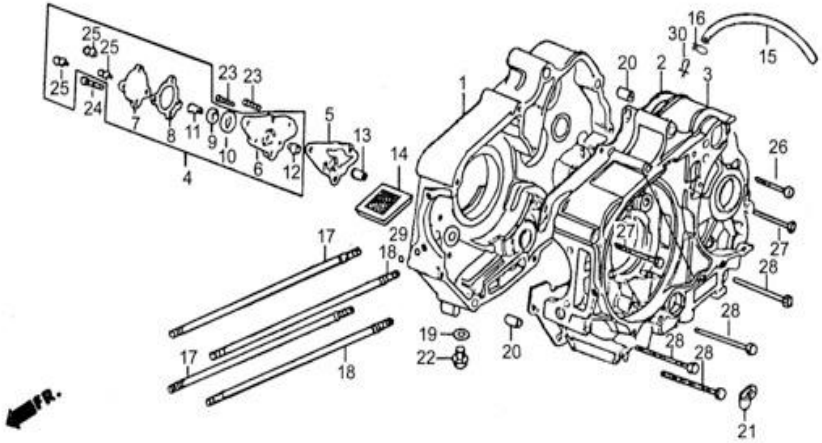

24	W5313510	SCREW 6×25	1		
25		SCREW 5×10	3		
26	EF001-53015	BOLT,FLANGE 6×50	1		
27	EF001-53014	BOLT,FLANGE 6×60	2		
28	EF001-53012	BOLT,FLANGE 6×65	4		
29	EG001-53303		1		
30	EF001-53204		1		

E-11	CRANKSHAFT / PISTON	ENZO110

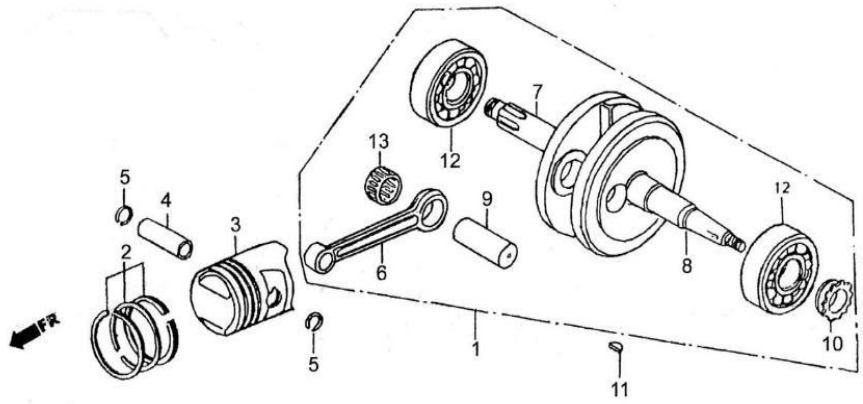

No	Part No	Part description	Q'ty	Notes	Frame No
1	EF999-52100-0050	CONNECTING,COMP.	1		
2	EI998-52200-0059	RING SET,PISTON	1		
3	EH999-52001	PISTON(STD.)	1		
4	EH999-52002	PIN,PISTON	1		
5	EG001-52003	CLIP,PISTON PIN	2		
6	EG001-52101	ROD,CONNECTING	1		
7	EF999-52103	CRANKSHAFT COMP.,R	1		
8	EF999-52102	CRANKSHAFT COMP.,L	1		
9	EG001-52104	PIN,CRANK	1		
10	EF001-52106	SPROCKET,TIMING	1		
11	EF001-52004	KEY,WOODRUFF	1		
12	W5900003	BEARING,RADIAL BALL 304	2		
13	EG001-52105	BEARING,ROOLER NEEDLE	1		

E-12	STARTING CLUTCH	ENZO110

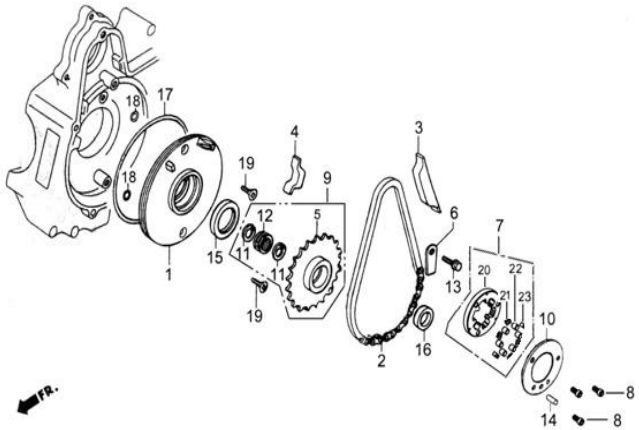

No	Part No	Part description	Q'ty	Notes	Frame No
1	EG001-60002	PLATE,OIL SEPARATOR	1		
2	EG001-60001A	CHAIN,STARTING 62 LINK	1		
3	EG001-60004A	GUIDE,STARTINHG CHAIN	1		
4	EG001-60005	PROTECTOR ,STARTING CHAIN	1		
5	EG001-60003	SPROCKET COMP.,STARTING	1		
6	EG001-60006	PLATE,STARTING SPROCKET SETTING	1		
7	EG001-60100	OUTTER COMP.,STARTING CLUTCH	1		
8	W5313204	SCREW,6×16	3		
9	EG001-60300	SPROCKET COMP.,STARTING	1		
10	EG001-60102	PLATE,STARTING CLUTCH SIDE	1		
11	EG001-60010	CIRCLIP,INTERNAN,23	2		
12	W5040004	REARING,ROLLER,19×23×13	1		
13	EG001-60106	BOLT,6×10	1		
14	EG001-60107	ROLLER,5×11.8	1		
15	EG001-60008-0050	OIL SEAL,30×42×4.5	1		
16	EG001-60007-0050	OIL SEAL,18.9×28×5	1		
17	EG001-60009	O-RING	1		
18	EG001-53204	O-RING	2		
19	W5313204	SCREW,6×16	2		
20			1		
21	EG001-60104	SPRING,STARTING CLUTCH ROLLER	3		
22	EG001-60103	ROLLER	3		
23	EG001-60105	CAP,SPRING	3		

E-13	STARTING MOTOR	ENZO110

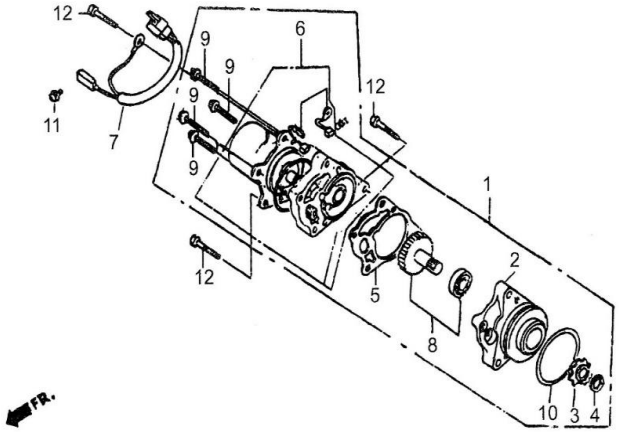

No	Part No	Part description	Q'ty	Notes	Frame No
1	EG001-83-0099	MOTOR ASSY.,STARTER	1		
2		CASE,FRONT	1		
3		SPROCKET	1		
4		CIRCLIP,EXTERNAL,12	3		
5		PACKING	1		
6		MOTOR COMP.	1		
7		SUB HARNESS A	1		
8		GEAR COMP.,DRIVEN	1		
9		BOLT	4		
10		O-RING A	1		
11		SCREW-WASHER,4×6	1		
12	W5323003	BOLT,HEX,6×50	3		

E-14.1	TRANSMISSION	ENZO110

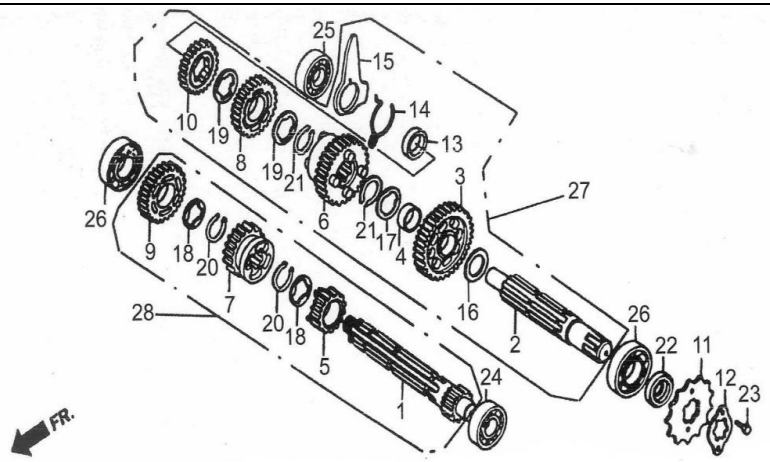

No	Part No	Part description	Q'ty	Notes	Frame No
1	EF020-551011	MAINSHAFT,TRANSMISSION	1		
2	EG001-55207	COUNTERSHAFT	1		
3	EF020-552011	GEAR,COUNTERSHAFT FIRST(36T)	1		
4	EG001-55215	BUSH 20×9	1		
5	EF020-551021	GEAR,MAINSHAFT 2nd(16T)	1		
6	EF020-552021	GEAR,COUNTERSHAFT 2nd(31T)	1		
7	EG001-55103	GEAR,MAINSHAFT 3rd(21T)	1		
8	EG001-55203	GEAR,COUNTERSHAFT 3rd(26T)	1		
9	EG001-55104	GEAR,MAINSHAFT 4th(24T)	1		
10	EG001-55204	GEAR,COUNTERSHAFT 4th(23T)	1		
11	VGA001-05002-0054	SPROCKER,DRIVE	1		
12	ZFA001-05003C	PLATE,FIXING	1		
13	EG001-55210	COLLAR	1		
14	EG001-55209	SPRING,DAMPER	1		
15	EG001-55208	PLATE,GEARSHIFT DRUM LOCK	1		
16	EG001-55211	WASHER,THRUST 17	1		
17	EG001-55213	WASHER,SPLINE	1		
18	EG001-55108	WASHER,SPLINE 17	2		
19	EG001-55214	WASHER,SPLINE 20	2		
20	EG001-55107	CIRCLIP 17	2		
21	EG001-55212	CIRCLIP	2		
22	EF001-53010-0050	OIL SEAL 17×29×5	1		
23	W5324003	BOLT 6×8	2		

E-14.2	TRANSMISSION	ENZO110

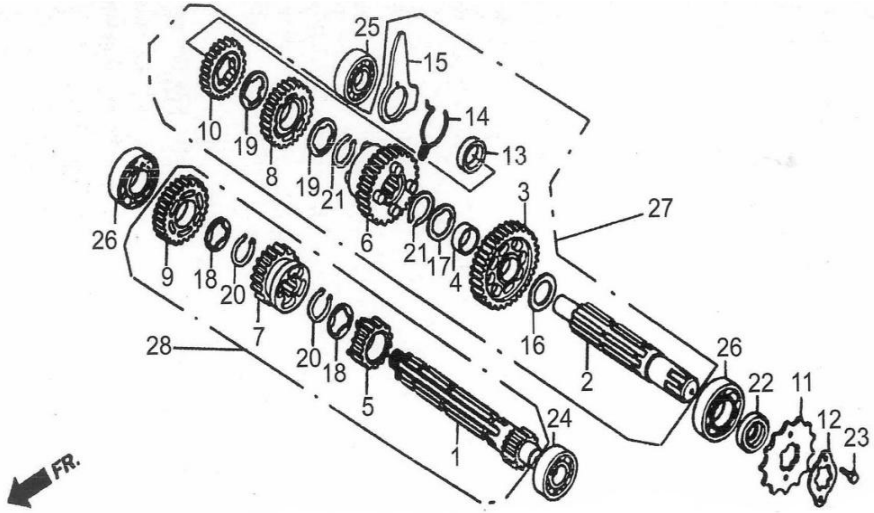

24	W5010246	BEARING,RADIAL BALL 6001	1		
25	W5010254	BEARING,RADIAL BALL 6201	1		
26	W5900014	BEARING,RADIAL BALL 6203	2		
27	EF020-552001	COUNTER SHAFT COMP., TRANSMISSION	1		
28	EF020-551001	MAIN SHAFT COMP., TRANSMISSION	1		

E-15	GEARSHIFT DRUM	ENZO110

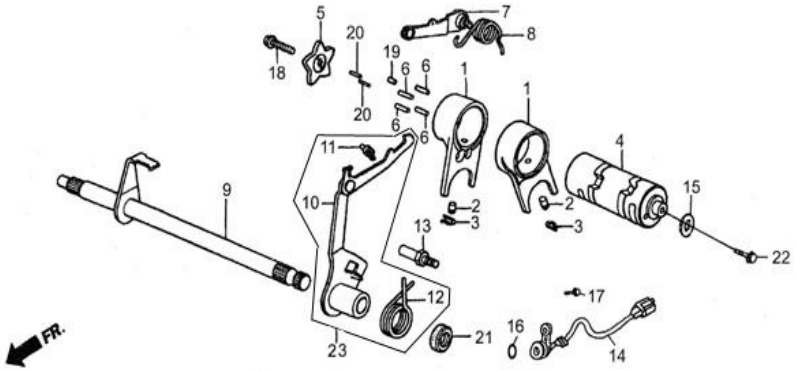

No	Part No	Part description	Q'ty	Notes	Frame No
1	EG001-54003	FORK,GEARSHIFT	2		
2	EG001-54014	PIN,GEARSHIFT FORK GUIDE	2		
3	EG001-54013	CLIP,GEARSHIFT FORK GUIDE PIN	2		
4	EG003-54001	DRUM,GEARSHIFT	1		
5	EG001-54007	PLATE,GEARSHIFT DRUM STOPPER	1		
6	EG001-54017	PIN,GEARSHIFT DRUM	4		
7	EG001-54200	STOPPER,COMP.,GEARSHIFT	1		
8	EG001-540021	SPRING,GEARSHIFT DRUM STOPPER	1		
9	EF009-54120-0051	SPINDLE,COMP.,GEARSHIFT	1		
10		ARM COMP.,GEARSHIFT	1		
11	EG001-54024	SPRING,GEARSHIFT ARM	1		
12	EG001-54023	SPRING,GEARSHIFT RETURN	1		
13	EF001-54009	PIN,SHIFT RETURN SPRING	1		
14	VFA001-890002	SWITCH COMP.,GEARSHIFTING DISPLAY	1		
15	EG003-89100	WASHER COMP.	1		
16	VGB001-89001	O-RING	1		
17	W5326005	BOLT FLANGE 6×16	1		
18	EG001-54011	BOLT 6×16	1		
19	EG001-54012	ROLLER 4×10	1		
20	EG001-54018	ROLLER 3×8.5	2		
21	EF001-53009-0050	OIL SEAL 11.6×24×11	1		
22	W5312102	SCREW 6×16	1		
23	EG001-54150-0052	ARM COMP.,GEARSHIFT	1		

E-16	KICK STARTER	ENZO110

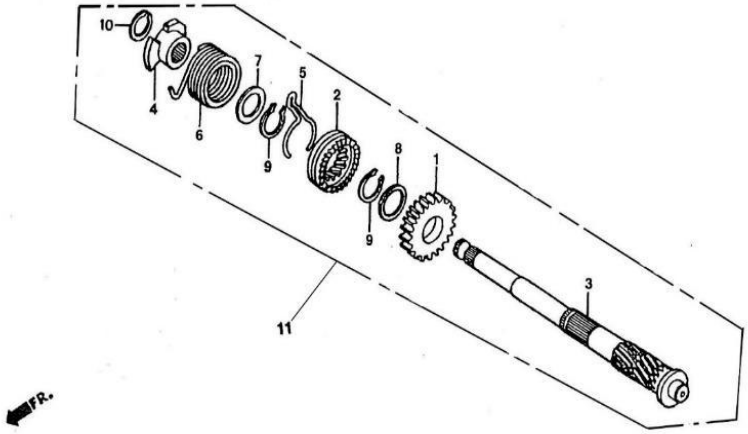

No	Part No	Part description	Q'ty	Notes	Frame No
1	EF001-57001	PINION,KICK STARTER	1		
2	EG001-57004	RATCHET,STARTING DRIVING	1		
3	EG001-57010	SPINDLE,KICK STARTING	1		
4	EG001-57008	RETAINER,KICK SPRING	1		
5	EG001-57005	SPRING,STARTING PINION FRICTION	1		
6	EG001-57007	SPRING,KICK STARTING	1		
7	EG001-57006	WASHER 17	1		
8	EG001-57002	WASHER,THRUST 20	1		
9	EG001-57003	WASHER 20	2		
10	EG001-57009	CIRCLIP EXTERNAL	1		
11	EF020-570001	KICK STARTER	1		

E-17	CARBURETOR	ENZO110

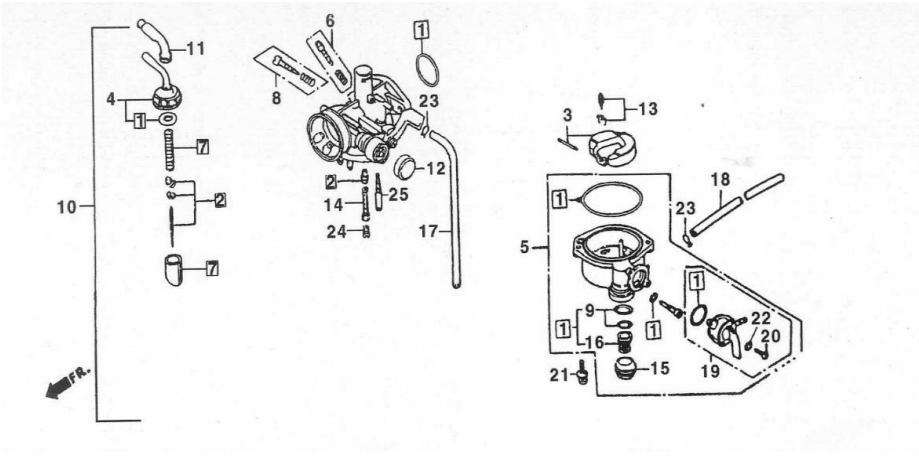

No	Part No	Part description	Q'ty	Notes	Frame No
1		GASKET SET	I		
2		NEEDLE SET,JET	1		
3		FLOAT SET	1		
4		TOP SET	1		
5		CHAMBER SET,FLOAT	1		
6		SCREW SET A	1		
7		VALVE SET,THROTTLE	1		
8		SCREW SET B	1		
9		GASKET SET B	1		
10	VGA001-052004-0051	CARBURETOR ASSY.	1		
11		CAP,CABLE SEALING	1		
12		CAP,CHOKE DUST	1		
13		VALVE COMP.,FLOAT	1		
14		HOLDER,NEEDLE JET	1		
15			1		
16		SCREEN,FILTER	1		
17		TUBE,AIR VENT	1		
18		TUBE,OVER FLOW	1		
19		BODY SET,LOCK	1		
20		SCREW,PAN,3×12	2		
21		SCREW-WASHER,4×18	2		
22		WASHER, SPRING, 3	2		
23		CLIP TUBE B6.5	1		
24		JET.MAIN,#75	1		
25		JET.SLOW,32#	1		

F-1	HEADLIGHT	ENZO110

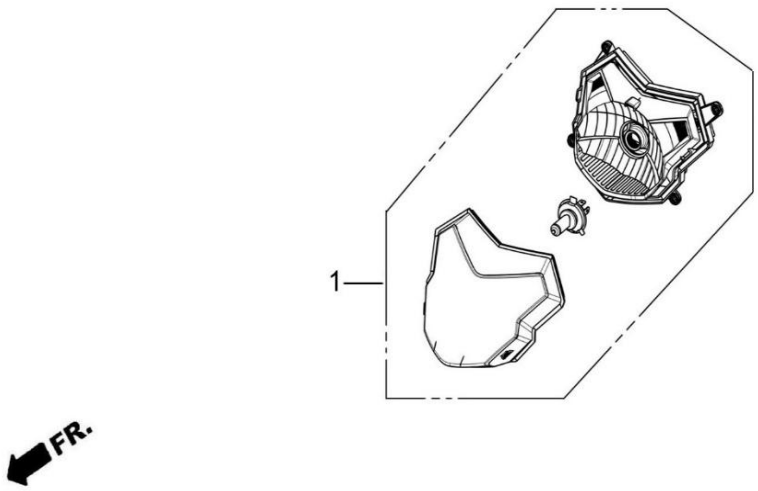

No	Part No	Part description	Q'ty	Notes	Frame No
1	VI0149-72000A	HEADLIGHT	1		

F-2	INSTRUMENT	ENZO110

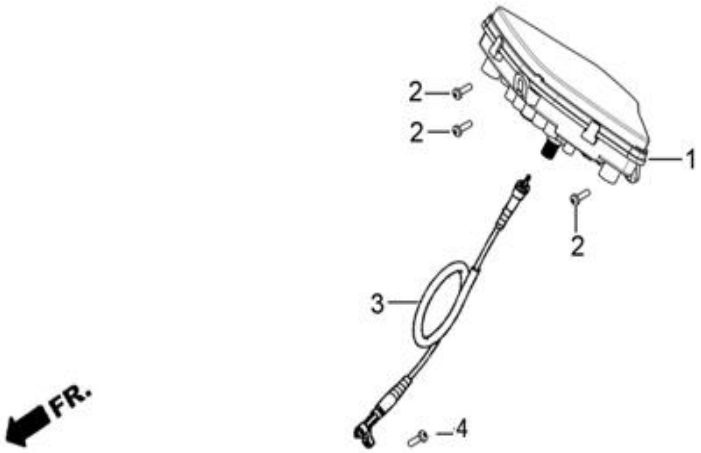

No	Part No	Part description	Q'ty	Notes	Frame No
1	VI0136-87000A	INSTRUMENT	1		
2	NW5311318	SCREW, TAPPING, 4.8×16	3		
3	VHK001-12700-0060	CABLE COMP., SEEEDOMETER	1		
4	W5316109		1		

F-3	SWITCH / CABLE	ENZO110

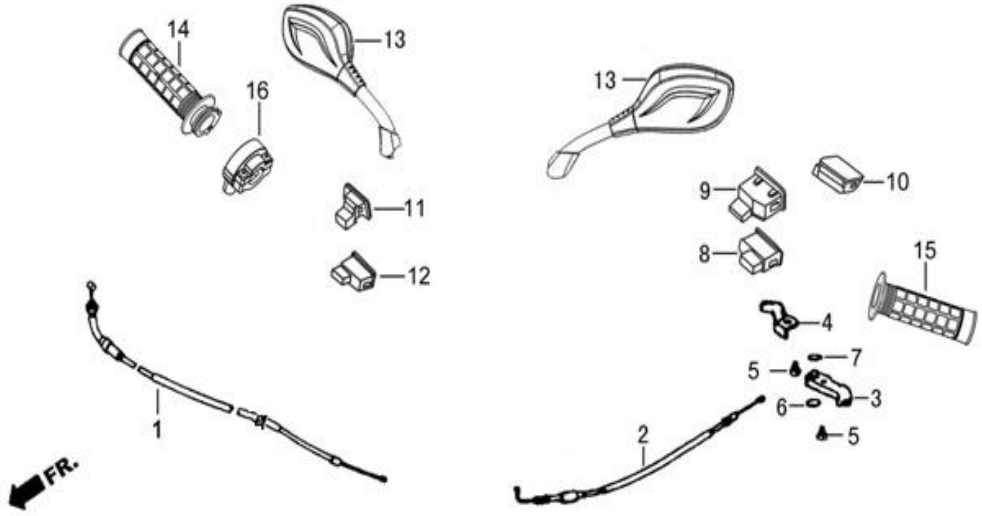

No	Part No	Part description	Q'ty	Notes	Frame No
1	VGA001-12400B-0060	CABLE,THROTTLE	1		
2	VG0224-12400	CABLE, CHOKE	1		
3	VHC997-01072	MIRROR	1		
4	VHC997-01073	BAND	1		
5	W5313132	SWITCH, LIGHTING	2		
6	W5365101	BUTTON, STARTING	1		
7	VGA001-11007	SWITCH, DIMMER	1		
8	VHC046-74003A	BUTTON, HORN	1		
9	VHC046-74002-0090	SWITCH, TURNING SIGNAL	1		
10	VHC046-74001-0090	RUBBER COMP,R.HANDLE	1		
11	VHC046-74004-0090	RUBBER,L.HANDLE	1		
12	VHC046-74005A		1		
13	VI0149-10000A		1		
14	VGB001-11201-0050		1		
15	VGB001-11250-0050		1		
16	VHC997-11400		1		

F-4	HANDLE PIPE / HANDLE COVER	ENZO110

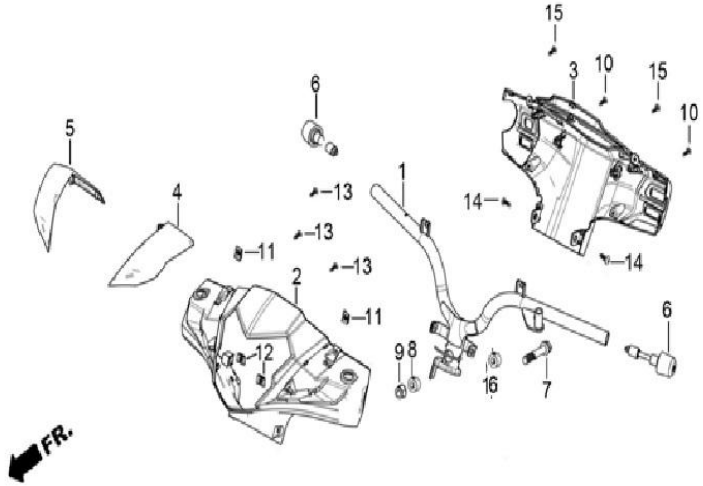

No	Part No	Part description	Q'ty	Notes	Frame No
1	VI0136-11100A-0229	HANDLE PIPE COMP.	1		
2	VI0149-17720-**	COVER,HANDLE FR.	1	PAINTED PART	
3	VI0136-17730A	COVER,HANDLE RR.	1		
4	VI0149-17740A	LEFT HANDLE DECORATIVE COVER	1	SILVER	
5	VI0149-17750A	RIGHT HANDLE DECORATIVE COVER	1	SILVER	
6	VI0149-11300	END PLUG,HANDLEBAR	2		
7	VGA001-01115A	BOLT,FLANGE,10×50	1		
8	VGA001-01005	SLEEVE,SETTING	1		
9	VGA001-01114	NUT,LOCKING M10×1.25	1		
10	NW5311318	SCREW, TAPPING ST4.8×16	2		
11	TG0003-17905A	NUT,CLAMP	2		
12	TG0003-17905A	NUT,CLAMP	2		
13	NW5311311	SCREW, TAPPING ST4.2×12	4		
14	W5373027		2		
15	NW5311314		4		
16	TN0001-01006		1		

F-5	BRAKING PUMP COMP.	ENZO110

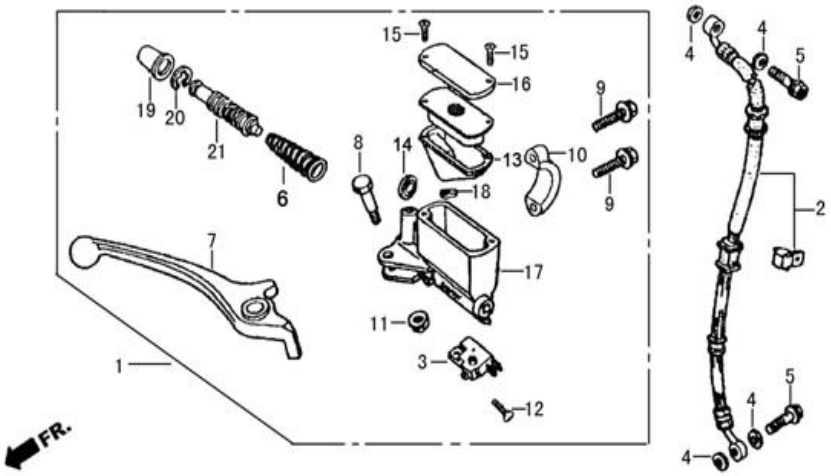

No	Part No	Part description	Q'ty	Notes	Frame No
1	VHK027-19100B	PUMP COMP.,BRAKING	1		
2		PIPE COMP.,BRAKING	1		
3		SWITCH, BRAKING LIGHT	1		
4	ZJ0049-19008	RING, SEALING	4		
5	ZJ0049-19007	BOLT, OIL THRU, 10×1.25	2		
6		SPRING,RETURN	1		
7		LEVER,BRAKING HANDLE	1		
8		BOLT,PIVOT	1		
9		BOLT,HALF COVER	2		
10		COVER,HALF	1		
11		NUT,SELF LOCK	1		
12		SCREW	1		
13		PAD, OIL CUP	1		
14		OIL WINDOW	1		
15		SCREW, OIL CUP COVER M4×12	2		
16		CAP,OIL CUP	1		
17		BODY,PUMP	1		
18		O-RING	1		
19		COVER,DUST	1		
20		CIRCLIP	1		
21		PISTON,PUMP	1		
22	VI0149-19500D	BRAKE, FR. DISK TYPE	1		

F-6	STEERING STEM	ENZO110

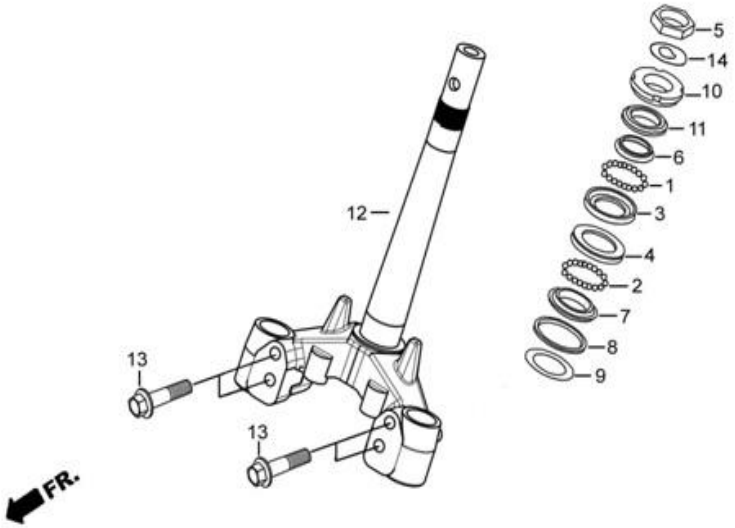

No	Part No	Part description	Q'ty	Notes	Frame No
1	VGA001-14400-0050	RETAINER A	1		
2	VGA001-14300-0050	RETAINER COMP.	1		
3	VGA001-14202-0051	SEAT,BALL UPPER	1		
4	VGA001-14203-0051	SEAT,BALL BOTTOM	1		
5	VGA001-14001	NUT,STEERING STEM LOCK	1		
6	VGA001-14201-0050	RACE,STEERING TOP CONE	1		
7	VGA001-14007	RACE,STEERING BOTTOM CONE	1		
8	VGA001-14008	DUST SEAL,STEERING STEM	1		
9	VGA001-14009	WASHER,DUST SEAL	1		
10	VGA001-14002	NUT,STEERING STEM TURN	1		
11	VGA001-14003	WASHER, STEERING STEM DUST	1		
12	VI0136-14100	STEM SUB ASSY., STEERING	1		
13	W5326088	BOLT,FLANGE,10×45	4		
14	VHC997-14150	WASHER, LOOSE PROOF	1		

F-7	FRONT PANEL	ENZO110

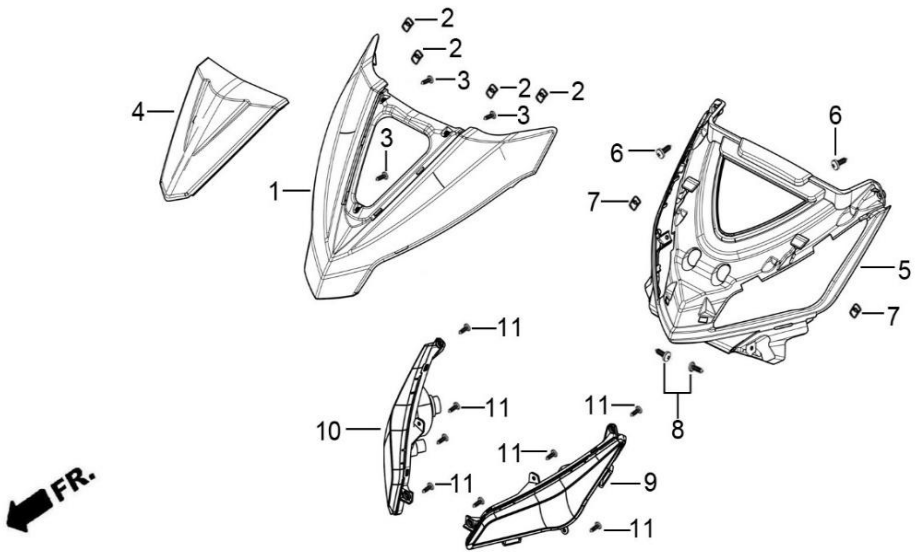

No	Part No	Part description	Q'ty	Notes	Frame No
1	VI0149-17941-**	FRONT COVER	1	PAINTED PART	
2	TG0003-17905A	SPRING CLIP	4		
3	NW5311311	SELF-TAPPING SCREW ST4.2*12(ϕ11)	3		
4	VI0136-17942	FRONT COVER DECORATIVE CAP	1	SILVER	
5	VI0149-17943	FRONT COVER LINER	1		
6	NW5311311	SELF-TAPPING SCREW ST4.2*12(ϕ11)	2		
7	TG0003-17905A	SPRING CLIP	2		
8	NW5311314	SELF-TAPPING SCREW ST4.2*16(ϕ11)	2		
9	VI0149-71150-0050	LEFT FRONT TURN SIGNAL	1	LED	
10	VI0149-71170-0050	RIGHT FRONT TURN SIGNAL	1	LED	
11	NW5311311	SELF-TAPPING SCREW ST4.2*12(ϕ11)	8		

F-8	FRONT FENDER	ENZO110

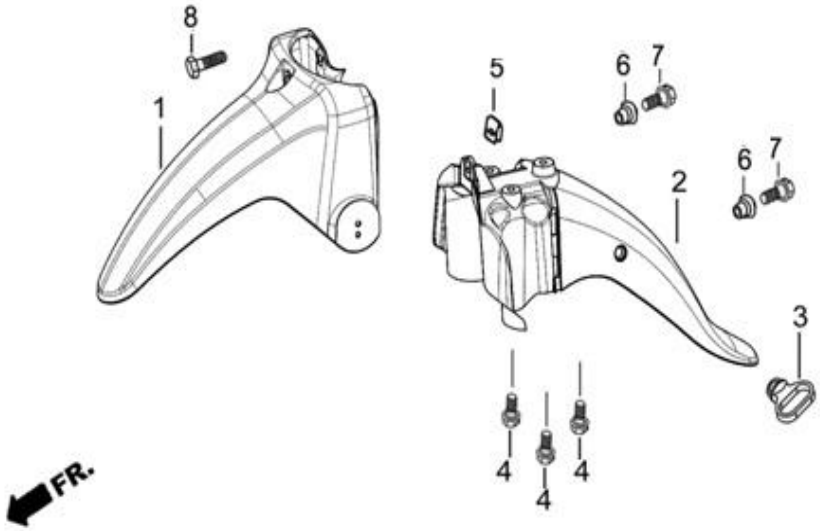

No	Part No	Part description	Q'ty	Notes	Frame No
1	VI0136-17201-**	FRONT, FR. MUDGUARD	1	PAINTED PART	
2	VHK027-17211	REAR, FR. MUDGUARD	1		
3	VGA001-01037A	CABLE RING	1		
4	VGA001-01116	BOLT,FLANGE,6×17	3		
5	TGA999-01105	CLAMP NUT	1		
6	VGB001-01099	SLEEVE,BOLT	2		
7	W5326007	BOLT,6×18	2		
8	VHK001-01001	BOLT, FLANGE	1		

F-9	FRONT CUSHION	ENZO110

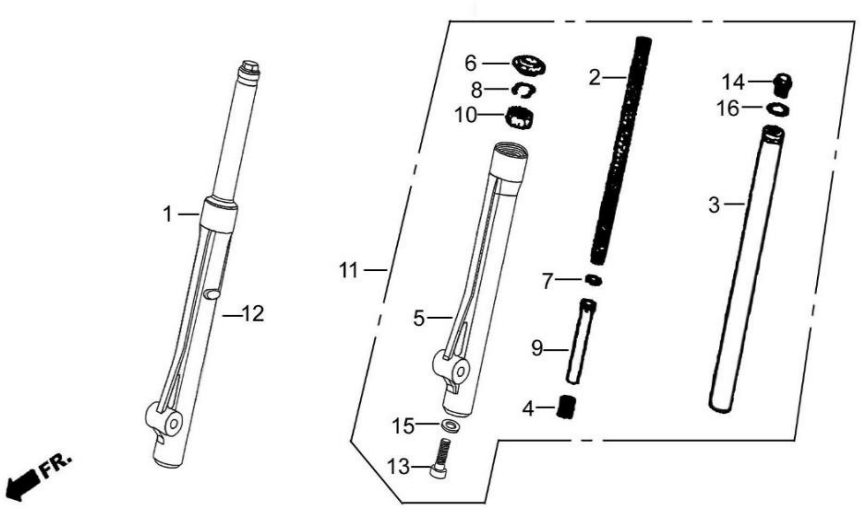

No	Part No	Part description	Q'ty	Notes	Frame No
1	VI0136-14400	FORK ASSY., R.FR.	1		
2		SPRING,FR.FORK	2		
3		PIPE COMP.,FR.FORK	2		
4		SPRING,DAMPING	2		
5		CASE,L.BOTTOM	1		
6		DUST SEAL	2		
7		RING PISTON	2		
8		RING,OIL SEAL STOPPER	2		
9		BAR,PISTON	2		
10		OIL SEAL,24.5×37×10.5	2		
11	VI0136-14300	FORK ASSY., L.FR.	1		
12		CASE,L.BOTTOM	1		
13		SCREW,8×28	2		
14		PLUG,THREAD	2		
15		SEALS WASHER	2		
16		O-RING	2		

F-10	BRAKE CALIPER COMP.	ENZO110

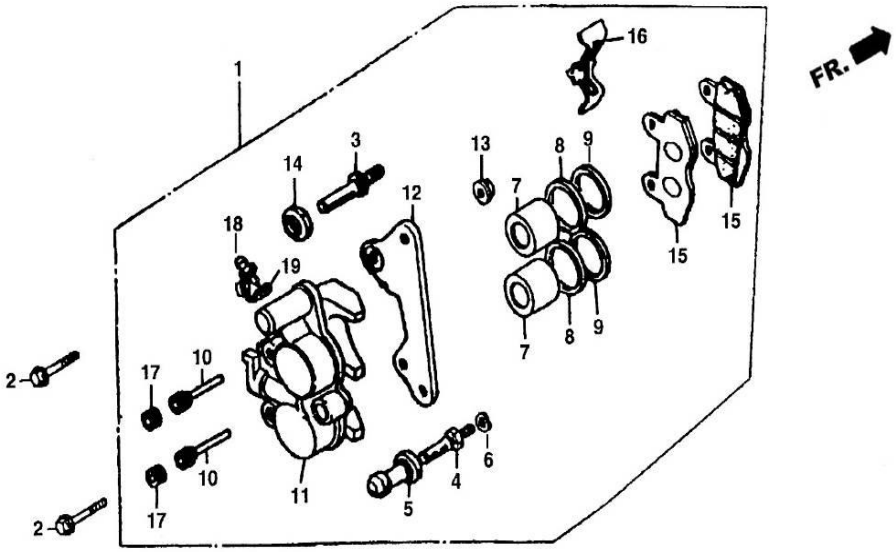

No	Part No	Part description	Q'ty	Notes	Frame No
1	VH0542-19510B	CALIPE,COMP.BRAKE	1		
2	W5326065	BOLT 8×28	2		
3		SHAFT,MAIN SLIDE	1		
4		SHAFT,SECOND SLIDE	1		
5		COVER,SECOND SLIDE SHAFT RUBBER	1		
6		WASHER,SPRING	1		
7		PISTON,CALIPER	2		
8		RING,PUST	2		
9		GASKET,SQUARE	2		
10		ROD,GUIDE	2		
11		BODY,CALISPER	1		
12		STAND,MOUNTING	1		
13		NUT,SELF LOCK	1		
14		COVER,RUBBER	1		
15		DISC,BRAKING	2		
16		SPRING,BRAKING DISC	1		
17		PLUG,SCREW	2		
18		COCK,RELIEF	1		
19		COVER,RELIEF COCK DUST	2		

F-11	FRONT WHEEL	ENZO110

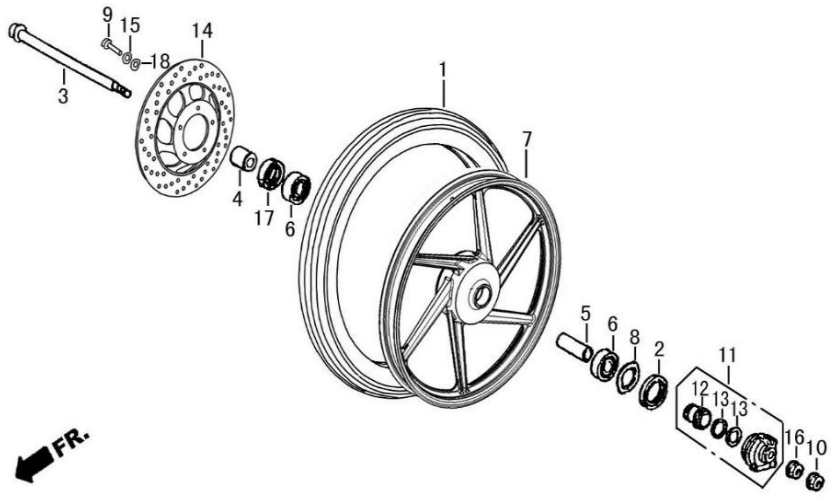

No	Part No	Part description	Q'ty	Notes	Frame No
1	VHC997-18200D	TUBE,FR.WHEEL TYRE	1		
2	VGA001-18008	SEAL,A OIL	1		
3	VHC997-180031	AXLE,FR.WHEEL	1		
4	VH0365-18010	COLLAR,FR.WHEEL SIDE	1		
5	VH0365-18020	COLLAR,DISTANCE	1		
6	W5900001	BEARING	2		
7	VH0542-18101B-0251	RIM,FR.WHEEL	1		
8	VHC997-18007	PLATE DRIVING	1		
9	W5322003	BOLT, M6×22	5		
10		CAP,LOCKING NUT	1		
11	VHK027-18300-EL	SPEED METER SET	1		
12		GEAR Z1, DRIVING	1		
13		WASHER B ,DRIVING	2		
14	VH0542-19001-05	DISC,FR.BRAKING	1		
15	W5366114	WASHER 6, SPRING	5		
16	VGA001-18002	NUT,LOCKING 12×1.25	1		
17	VGA001-18008	SEAL,OIL	1		
18	W5366114	WASHER 6	5		

F-12	REAR BRAKE PANEL	ENZO110

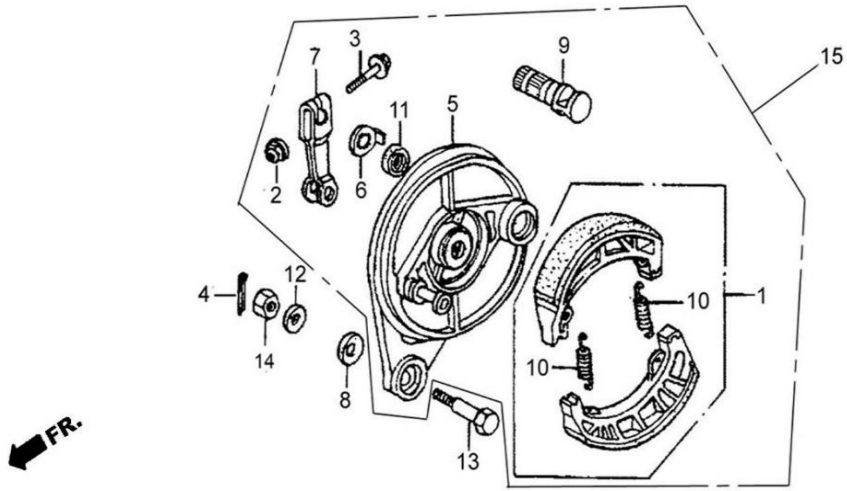

No	Part No	Part description	Q'ty	Notes	Frame No
1		SHOE SET,BRAKE	2		
2		NUT,FLANGE,6	1		
3		BOLT FLANGE 6×32	1		
4	W5338102	PIN,SPLIT 2.0×16	1		
5		PANEL COMP.,RR.BRAKE	1		
6		INDICATOR,RR.BRAKING	1		
7		ARM,RR.BRAKE	1		
8	VGA001-01042	PAD, RUBBER	1		
9		CAM, RR.BRAKE	1		
10		SPRING,BRAKE SHOE	2		
11		DUST SEAL	1		
12	VGA001-01071	WASHER 8	1		
13	ZDG001-28008	BOLT,BRAKE STOPPER	1		
14	W5336205	NUT 8	1		
15	VGA001-28400D-EL	REAR BRAKE	1		

F-13	REAR WHEEL	ENZO110

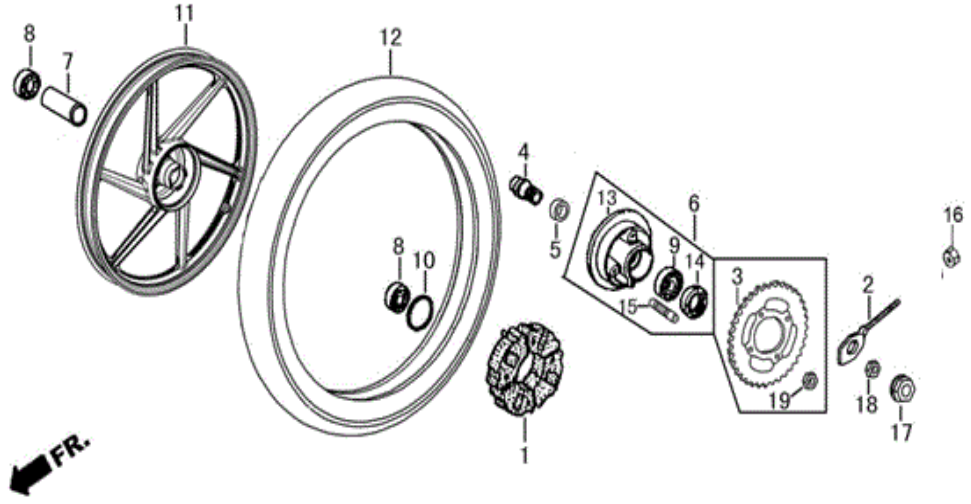

No	Part No	Part description	Q'ty	Notes	Frame No
1	VHC997-28007B	BLOCK,DAMPER	4		
2	VGB020-28600B	ADJUSTER,L.CHAIN	2		
3	VGA001-28351	SPROCKET,REAR	1		
4	VHC997-28013	COLLAR, DISTANCE	1		
5	VHB042-28001	COLLAR,RR.WHEEL SIDE	1		
6	VGA001-28300	DAMPER COMP.	1		
7	VHB042-28002	SLEEVE,RR.WHEEL AXLE	1		
8	W5010265	BEARING,6301	2		
9	W5016031	BEARING,6203-RS	1		
10	VGA001-28008	O-RING 40.5×3	1		
11	VH0542-28101A-0251	RIM, RR.WHEEL	1		
12	VHC997-28200E	TIRE,RR.WHEEL	1		
13	VGA001-28300-0050	DAMPER	1		
	VGA001-28302-0090	OIL SEAL, 27×40×6	1		
15	VGA001-28301	BOLT,STUD	4		
16		NUT, 6	1		
17	VGA001-18002	NUT, LOCKING 12×1.25	1		

F-14	FUEL TANK	ENZO110

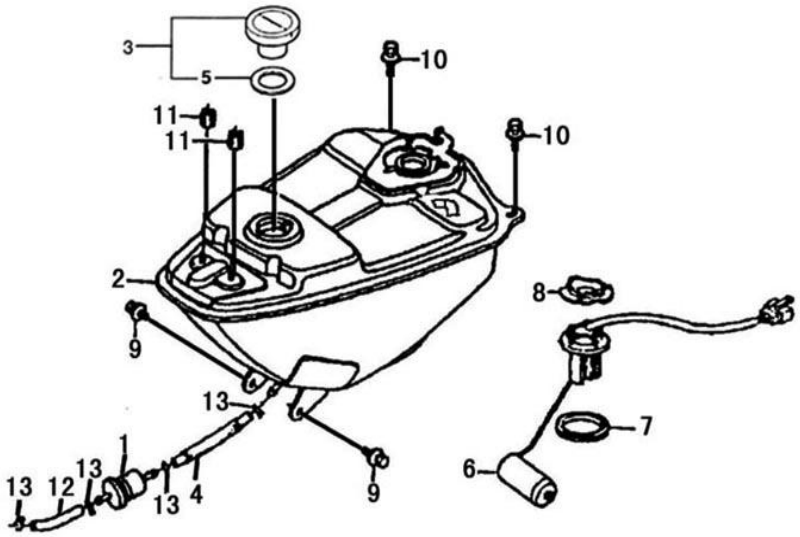

No	Part No	Part description	Q'ty	Notes	Frame No
1	VGA001-01035-0052	FUEL FILTER	1		
2	VHC997-361001	FUEL TANK WELDING ASSEMBLY	1		
3	VGA001-36200B	FUEL TANK CAP ASSEMBLY	1		
4	VHC997-010901	FUEL PIPE I ASSEMBLY	1		
5		FUEL TANK CAP SEALING GASKET	1		
6	VGB001-86000B	FUEL LEVEL SENSOR	1		
7	VGA001-01034	SEALING RING	1		
8	VGA001-01063	FUEL LEVEL SENSOR BRACKET	1		
9	W5328205	BOLT ASSEMBLY GB9074.14-88 6*16	2		
10	W5326022	BOLT GB5787 8*16	2		
11	NW5331308	FLANGE NUT GB6177-86 M6	2		
12	VHK027-36021	FUEL PIPE (Ⅱ) ASSEMBLY	1		
13	VGA001-01014	CLIP	4		

F-15	SEAT	ENZO110

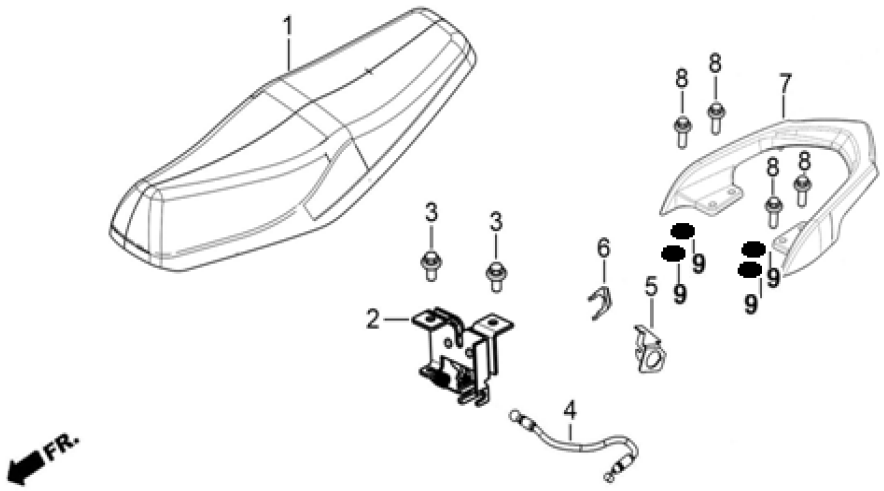

No	Part No	Part description	Q'ty	Notes	Frame No
1	VI0136-33000E	SEAT COMP., DOUBLE	1		
2	TG0003-02100A	SEAT LOCK COMP.	1		
3	W5326003	BOLT, FLANGE, 6×12	2		
4	VH0116-12600-0060	CABLE, SEAT LOCK	1		
5	VHC997-73401	HOLDER,SEAT LOCK CABLE	1		
6	VGA001-01016	SPRING, LOCK KEY SETTING	1		
7	VI0136-04450-16	RAIL, RR.GRIP	1		
8	W5326026	BOLT, HEX, 8×28	4		
9	VGB001-37003		4		

F-16	BODY COVER	ENZO110

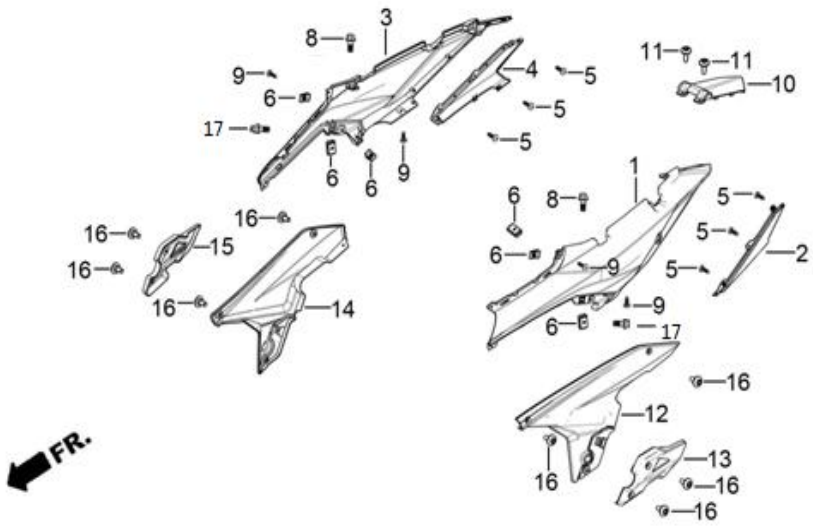

No	Part No	Part description	Q'ty	Notes	Frame No
1	VI0136-17821-**	LEFT BODY COVER	1	PAINTED PART	
2	VI0149-17822	LEFT BODY COVER DECORATIVE STRIP	1		
3	VI0136-17831-**	RIGHT BODY COVER	1	PAINTED PART	
4	VI0149-17832	RIGHT BODY COVER DECORATIVE STRIP	1		
5	NW5311311	SELF-TAPPING SCREW ST4.2*12	6		
6	VGA001-011061	CLAMP NUT M5 (OPENING SIZE 1.8)	6		
8	ZJ0038-02001	FAIRING FASTENING SCREW M5	2		
9	NW5311314	SELF-TAPPING SCREW ST4.*16	4		
10	VI0149-17851	REAR CENTER COVER	1	SILVER	
11	VGA001-011102-0060	STAINLESS STEEL HEX SOCKET SCREW 6*16	2		
12	VI0149-17871	LEFT SIDE COVER	1		
13	VI0149-17872-MN	LEFT SHIELD	1		
14	VI0149-17881	RIGHT SIDE COVER	1		
15	VI0149-17882-MN	RIGHT SHIELD	1		
16	ZJ0038-02001	FAIRING FASTENING SCREW M5	8		
17	W5326003	FLANGE BOLT WHITE ZINC GB5787 6*12	2		

F-17	AIR CLEANER	ENZO110

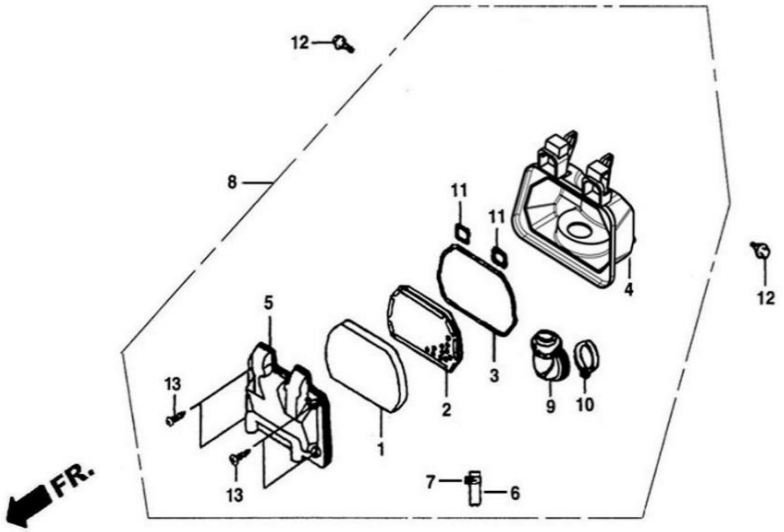

No	Part No	Part description	Q'ty	Notes	Frame No
1		ELEMENT,AIR CLEANER	1		
2		TRAP COMP.,FLAME	1		
3		SEAL,AIR CLEANER COVER	1		
4		CASE,AIR CLEANER	1		
5		COVER,AIR CLEANER CASE	1		
6		TUBE	1		
7		CLAMP	1		
8	VIB031-05100	AIR CLEANER	1		
9		TUBE,AIR CLEANER CONNECTING	1		
10		SEAL,AIR CLEANER CONNECTING TUBE	1		
11		SEAL,AIR CLEANER CASE	2		
12	VGA001-01111	BOLT,FLANGE 6×12	2		
13		SCREW,TAPPING ST5.5×16-F	4		

F-18	EXHAUST MUFFLER	ENZO110

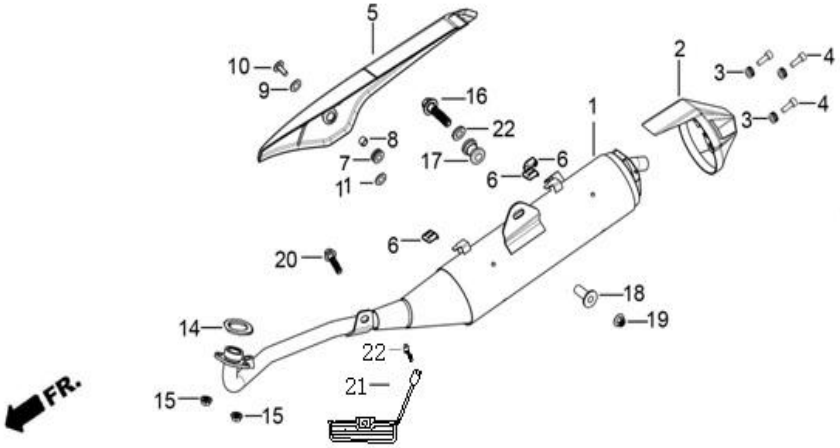

No	Part No	Part description	Q'ty	Notes	Frame No
1	VI0136-62	MUFFLER COMP.,EXHAUST	1		
2	VI0136-05001-EL	PROTECT COVER,EXHANST PIPE	1		
3	ZJ0038-05006	RUBBER,COVER PROTECT	3		
4	ZJ0038-05007		3		
5	VI0149-17062		1		
6	ZH0020-62201		3		
7	TG0004-62007		1		
8	TG0004-62006	RUBBER,COVER PROTECT	1		
9	W5365102		1		
10	GDA001-175100		1		
11	TG0003-62003		1		
14	VGA001-05301	GASKET,EXHAUST PIPE	1		
15	W5336205	NUT HEX 8	2		
16	VGA001-01115A		1		
17	ZJ0049-17009		1		
18	ZJ0049-01093		1		
19	W5336504		1		
20	W5326131		1		
21	VI0149-04050		1		
22	W5326109		1		

F-19	PEDAL	ENZO110

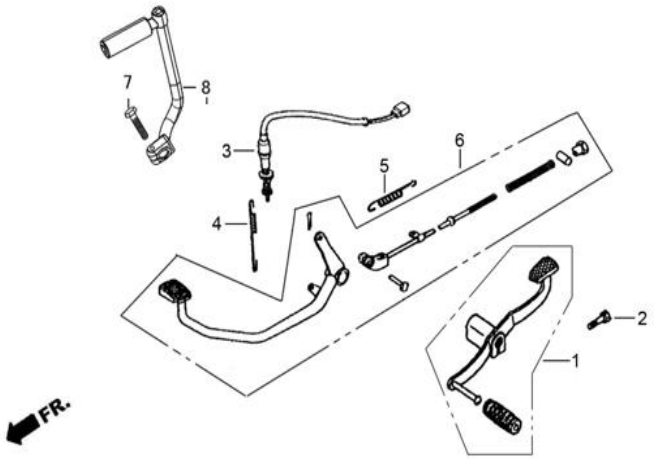

No	Part No	Part description	Q'ty	Notes	Frame No
1	VGA001-055001	PEDAL,GEAR SHIFT	1		
2	W5324007		1		
3	VGA001-76200	SWITCH,REAR BRAKE	1		
4	VGB001-01012	SPRING,BRAKE SWITCH	1		
5	VGB001-01016	SPRING	1		
6	VGB019-25100C-0060	ROD COMP.,RR.BRAKE PULL	1		
7	W5324024		1		
8	ZH0004-60		1		

F-20	REAR STEP	ENZO110

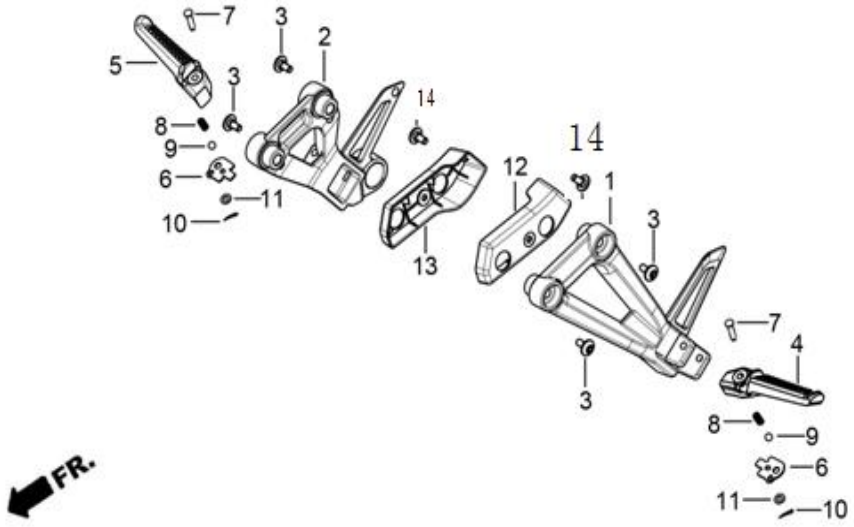

No	Part No	Part description	Q'ty	Notes	Frame No
1	VI0149-04100-16	LEFT SECONDARY FOOT PEG SUPPORT ASSEMBLY	1		
2	VI0149-04200-16	RIGHT SECONDARY FOOT PEG SUPPORT ASSEMBLY	1		
3	VI0149-01001	HEX SOCKET BOLT M8*32	4		
4	ZH0020-04102A-16	LEFT SECONDARY FOOT PEG BODY	1	SILVER	
5	ZH0020-04202A-16	RIGHT SECONDARY FOOT PEG BODY	1	SILVER	
6	ZH0020-04103	LIMIT PLATE	2		
7	ZJ0038-04001	PIN SHAFT	2		
8	VHK027-04104	SPRING	2		
9	VHK027-04105	STEEL BALL	2		
10	W5338101	SPLIT PIN GB91-76 1.6*16	2		
11	W5367202	WASHER GB848-86 ϕ6	2		
12	VI0149-17873	LEFT FOOT PEG SUPPORT SHIELD	1		
13	VI0149-17883	RIGHT FOOT PEG SUPPORT SHIELD	1		
14	W5326109	BOLT GB5789/M6*12 (TRIVALENT COLOR/S10)	2		

F-21	STAND	ENZO110

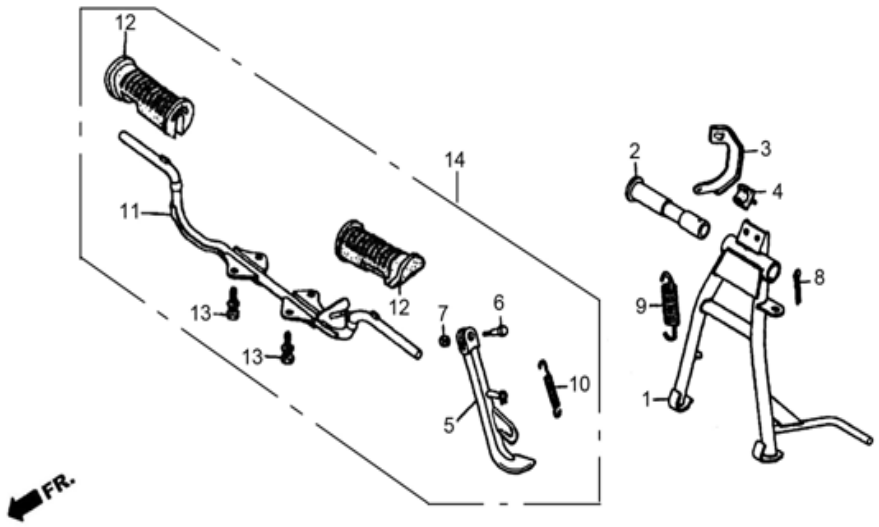

No	Part No	Part description	Q'ty	Notes	Frame No
1	VHC997-24400F-0061	STAND,MAIN	1		
2	VGA001-01002A	PIVOT,MAIN STAND	1		
3	VBB999-010611	PLATE,MAIN STAND HOOK	1		
4	VHB997-01031	DAMPER,MAIN STAND	1		
5	VI0136-24-0060	STAND COMP.,SIDE	1		
6	ZJ0038-02003	PIVOT BOLT,SIDE STAND	1		
7	VI0106-01101	NUT,10×1.25	1		
8	W5338109	COTTER,3.0×26	1		
9	VGA001-01011	SPRING,MAIN STAND	1		
10	VGB001-010151	SPRING,SIDE STAND	1		
11	VI0136-24-0060	STEP ASSY.,FOOT	1		
12	VGA001-24101	RUBBER,STEP	2		
13	W5328308	BOLT,8×25	4		
14	VI0136-24-0060	STEP & SIDE STAND	1		

F-22	REAR FORK / CHAIN	ENZO110

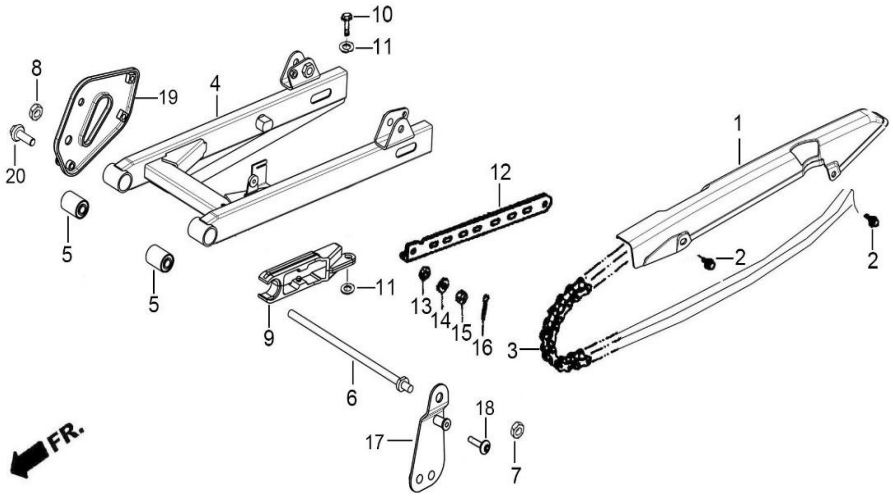

No	Part No	Part description	Q'ty	Notes	Frame No
1	VI0149-17008	CASE COMP., UPPER HALF CHAIN	1		
2	W5328203		2		
3	VGA001-01300	CHAIN	1		
4	VHB042-26100A-0229	FORK,REAR	1		
5	ZDG001-26200	SLEEVE	2		
6	VI0149-26001	PIVOT,RR.FORK	1		
7	NW5331203		1		
8	VI0106-01101	NUT,HEX,10×1.25	1		
9	VGB993-01033	PROTECTOR,CHAIN	1		
10	W5326007		1		
11	W5365102		2		
12	ZFB001-26001	BAR,REAR BRAKE STOP	1		
13	VGA001-01071	WASHER,8	1		
14	W5365104	WASHER 8	1		
15	W5336205	NUT M8	1		
16	W5338103	PIN SPLIT 2×20	1		
17	VI0149-02030		1		
18	ZJ0038-02003		1		
19	VI0149-02020		1		
20	NW5321025		1		

F-23	REAR CUSHION	ENZO110

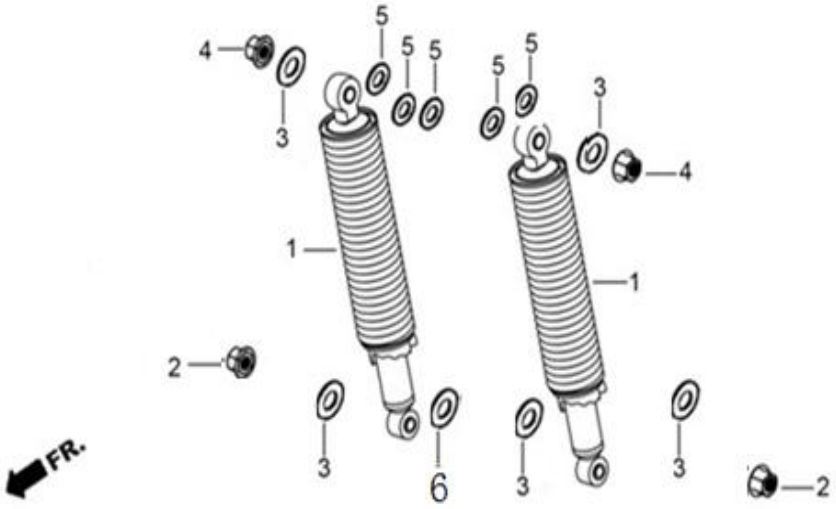

No	Part No	Part description	Q'ty	Notes	Frame No
1	VI0149-30	REAR CUSHION	1		
2	ZDG001-01106		2		
3	W5365106	WASHER 10	5		
4	W5336301	NUT 10×1.25	2		
5	W5366109	WASHER,PLAIN 12	5		
6	VHK027-02001		1		

F-24	REAR FENDER	ENZO110

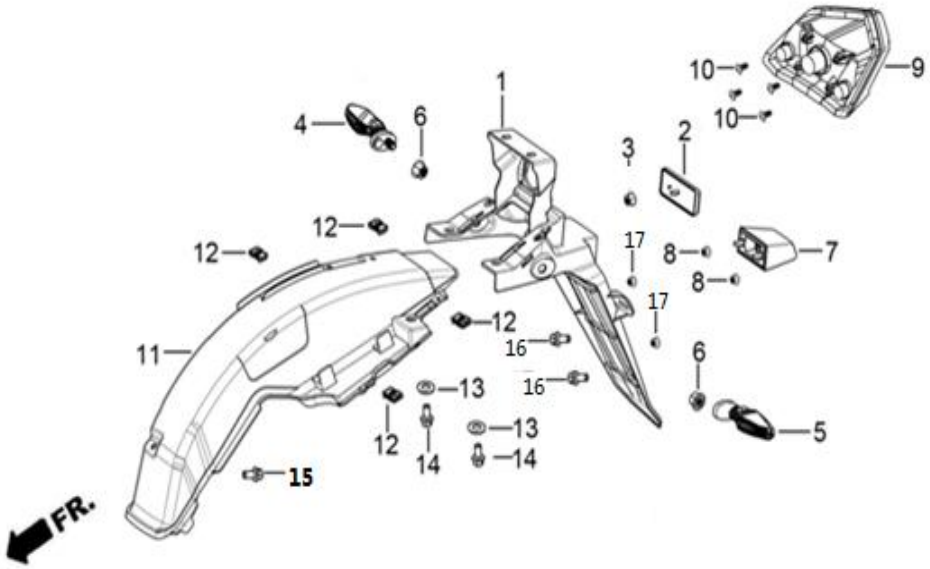

No	Part No	Part description	Q'ty	Notes	Frame No
1	VI0149-17602-0050	REAR MUDGUARD REAR PART	1		
2	VIB995-17170-0050	REAR REFLECTOR ASSEMBLY	1		
3	W5336501	HEXAGON FLANGE NUT M5	1		
4	/	/	/		
5	/	/	/		
6	/	/	/		
7	VI0149-89-0051	REAR LICENSE PLATE LIGHT	1		
8	W5336501	HEXAGON FLANGE NUT M5	2		
9	VI0136-88000A	TAILLIGHT (LED)	1		
10	NW5311311	SELF-TAPPING SCREW ST4.2*12(ϕ11)	4		
11	VI0149-17601	REAR MUDGUARD FRONT PART			
12	TG0003-17905A	SPRING CLIP	4		
13	W5365102	LARGE WASHER GB96-87 ϕ6	2		
14	W5326007	FLANGE BOLT GB5787 6*18	2		
15	VGA001-01109	BOLT 6*14	1		
16	W5326003	FLANGE BOLT WHITE ZINC GB5787 6*12	2		
17	NW5331308	HEXAGON FLANGE NUT M6	2		
18	W8018862	WIRE CLIP	3		

F-25	BATTERY	ENZO110

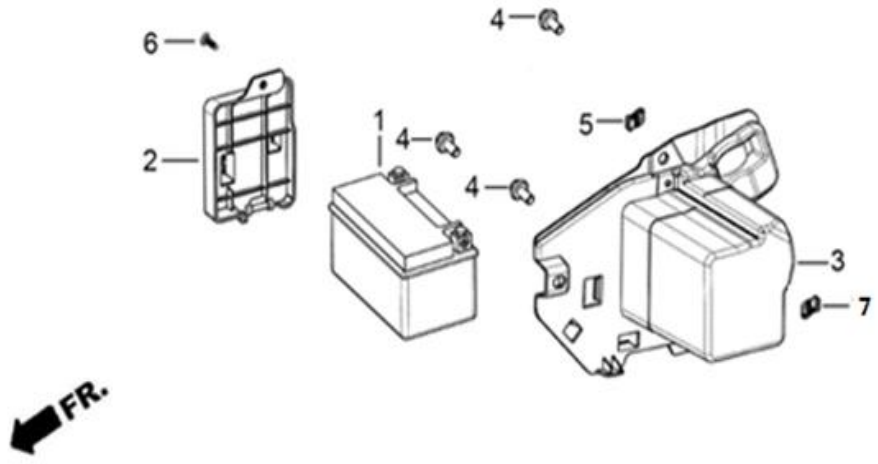

No	Part No	Part description	Q'ty	Notes	Frame No
1	NTIP001-78-0052	BATTERY	1		
2	VI0149-17402	BATTERY BOX COVER	1		
3	VI0149-17401	BATTERY BOX	1		
4	VGA001-01109	BOLT 6*14	3		
5	TG0003-17905A	SPRING CLIP	1		
6	NW5311317	SELF-TAPPING SCREW ST4.8*12	1		
7	VGA001-01119	CLAMPING NUT M6	1		

F-26	TOOLS	ENZO110

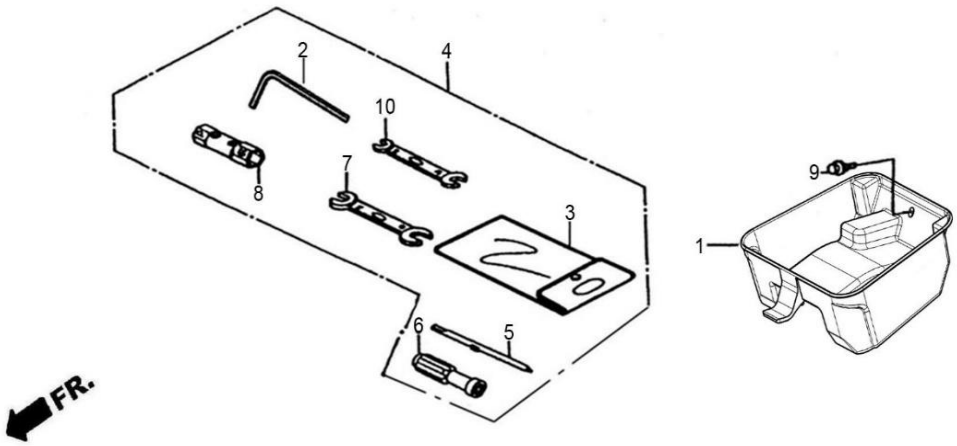

No	Part No	Part description	Q'ty	Notes	Frame No
1	VH0063-17048	BOX,TOOL	1		
2		ALLEW WRENCH	1		
3		BAG,TOOL	1		
4	VGA001-31000B-0050	TOOLS	1		
5		BAR,SCREW	1		
6		HANDLEBAR,SCREW	1		
7		WRENCH,OPEN,14×17	1		
8		WRENCH,UNIVERSAL SOCKET	1		
9	VGA001-01109	BOLT FLANGE 6*12	1		
10		WRENCH,OPEN,10×12	1		

F-27	WIRE HARNESS	ENZO110

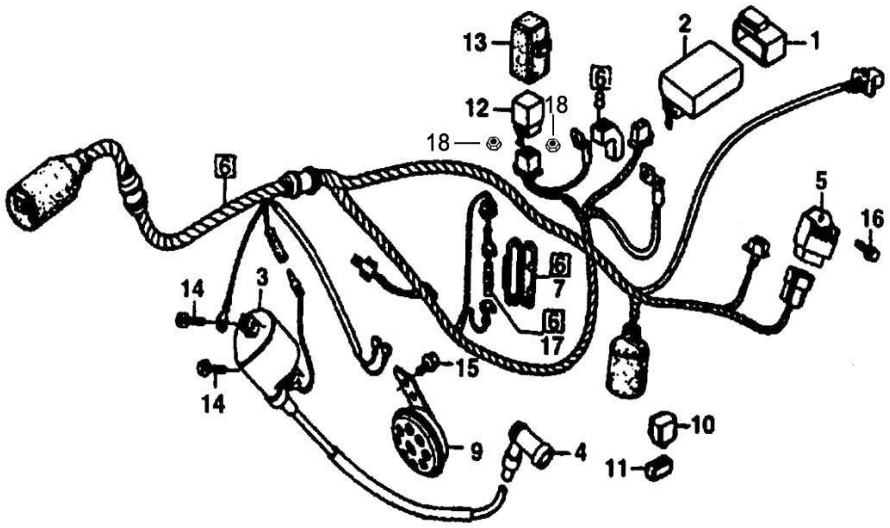

No	Part No	Part description	Q'ty	Notes	Frame No
1		SUSPEND SLEEVE,CDI UNIT	1		
2	VI0001-82	CDI UNIT	1		
3	VHC997-81	COIL,IGNITION	1		
4	VGB001-81100-0052	CAP ASSY., NOISE SUPPRESSOR	1		
5	ZJH001-85000A	RECTIFIER,REGULATOR	1		
6	VI0136-77000B	HARNESS,WIRE	1		
7		FUSE CASE	1		
8		COVER, BATTERY TERMINAL	1		
9	VH0278-70000A	HORN	1		
10	ZJ0038-79000A	RELAY CPMP.,FLASH	1		
11		SUSPEND SLEEVE,FLASH RELAY	1		
12	VHC080-80-0050	RELAY,STARTING	1		
13		HANGER,STARTING RELAY	1		
14	W5313109	SCREW,5×20	2		
15	W5328203	BOLT,6×10	1		
16	W5326008	SCREW,6×20	2		
17	VGA001-77001	FUSE	1		
18	W5336203	NUT M6	2		

F-28	FRAME BODY	ENZO110

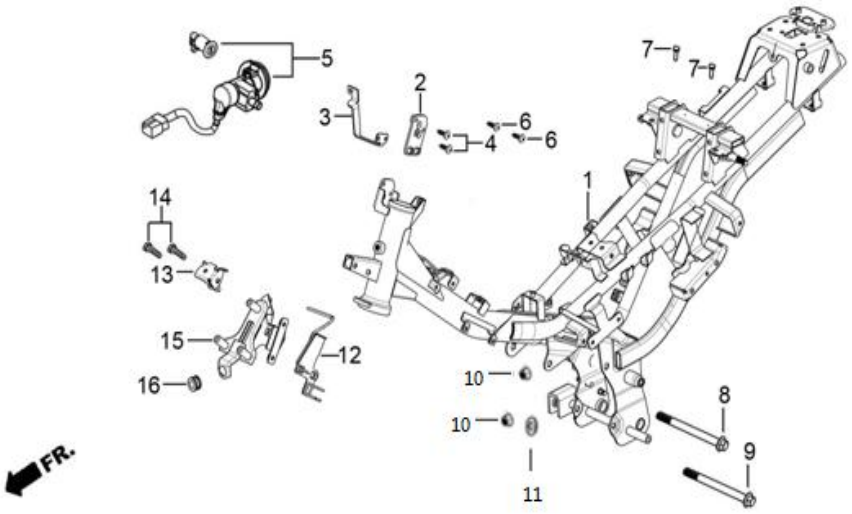

No	Part No	Part description	Q'ty	Notes	Frame No
1	VI0136-37000A-0229	BODY COMP.,FRAME	1		
2	VI0149-02010	IGNITION SWITCH ADAPTER PLATE	1		
3	VI0149-02006	IGNITION SWITCH TENSION PLATE	1		
4	ZDG001-01104	SELF-LOCKING SCREW	2		
5	VHC046-74005A	START SWITCH	1		
6	NW5311213	CROSS RECESS PAN HEAD SCREW M6*16	4		
7	/	ALUMINUM NAMEPLATE RIVET GB827-76 2*6	2		
8	ZDG001-01101	FIXING BOLT,ENGINE UPPER	1		
9	VGB001-01102	FIXING BOLT,ENGINE UNDER	1		
10	W5336205	NUT HEX 8	2		
11	W5361103	SPRING WASHER GB93-85 ϕ8	1		
12	VI0149-01066	WIRE CLIP BRACKET ASSEMBLY	1		
13	/	HORN BRACKET ASSEMBLY	1		
14	W5326029	FLANGE BOLT GB5787 8*35	2		
15	VI0149-02300A	FRONT PANEL BRACKET ASSEMBLY	1		
16	VGB001-17051	RUBBER RING	1		

F-29	WINDSHIELD	ENZO110

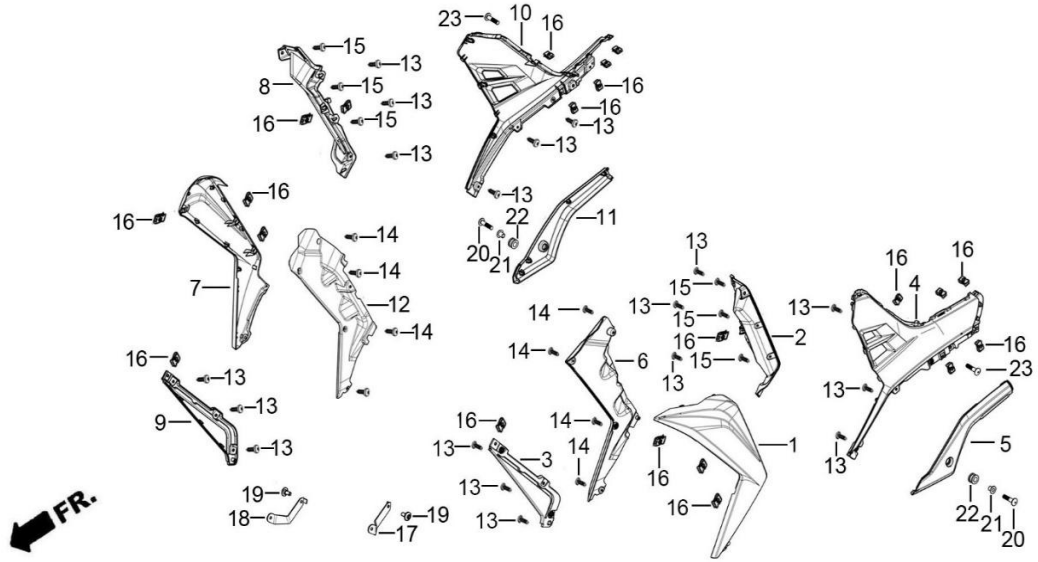

No	Part No	Part description	Q'ty	Notes	Frame No
1	VI0149-17921-**	LEFT WINDSHIELD	1	PAINTED PART	
2	VI0149-17922	LEFT WINDSHIELD CONNECTING PLATE	1	SILVER	
3	VI0149-17923	LEFT WINDSHIELD DECORATIVE PART	1		
4	VI0149-17924	LEFT GRILLE	1	SILVER	
5	VI0149-17925	LEFT PROTECTIVE STRIP	1		
6	VI0149-17926A	LEFT WINDSHIELD LINING	1		
7	VI0149-17931-**	RIGHT WINDSHIELD	1	PAINTED PART	
8	VI0149-17932	RIGHT WINDSHIELD CONNECTING PLATE	1	SILVER	
9	VI0149-17933	RIGHT WINDSHIELD DECORATIVE PART	1		
10	VI0149-17934	RIGHT GRILLE	1	SILVER	
11	VI0149-17935	RIGHT PROTECTIVE STRIP	1		
12	VI0149-17936A	RIGHT WINDSHIELD LINING	1		
13	NW5311311	SELF-THREADING SCREW ST4.2*12 (ϕ11)	32		
14	NW5311318	SELF-THREADING SCREW ST4.8*16	8		
15	W5311317	SELF-THREADING SCREW ST4.8*12	2		
16	TG0003-17905A	SPRING CLIP	20		
17	VG0224-02050	LEFT WINDSHIELD SUPPORT ASSEMBLY	1		
18	VG0224-02060	RIGHT WINDSHIELD SUPPORT ASSEMBLY	1		
19	W5324006	HEXAGON HEAD BOLT FULL THREAD GB5783 6*16	2		
20	VHB001-011042-0060	STAINLESS STEEL INNER HEXAGON SCREW 6*22	2		
21	ZJ0049-01091	FRONT MUD LINER SLEEVE	2		
22	ZJ0049-17006	FRONT MUD RUBBER PAD	2		
23	W5326007	FLANGE BOLT GB5787 6*18	2		

F-30	MAIN PIPE COVER	ENZO110

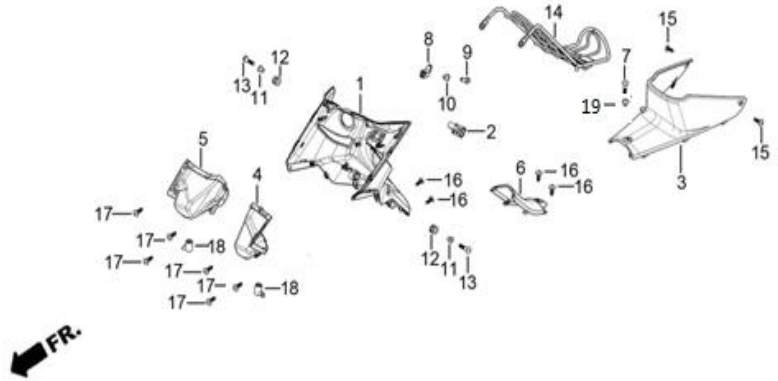

No	Part No	Part description	Q'ty	Notes	Frame No
1	VI0149-17861B-XX	MAIN COVER FRONT PART	1		
2	VI0149-98	USB CHARGING PORT	1		
3	VI0149-17801B-XX	CENTER COVER	1		
4	VI0149-17862-XX	LEFT STORAGE BOX OF MAIN COVER	1		
5	VI0149-17863-XX	RIGHT STORAGE BOX OF MAIN COVER	1		
6	VI0149-17864-XX	MAIN COVER REAR PART	1		
7	VHB001-011042-0060	STAINLESS STEEL INNER HEXAGON SCREW 6*22	1		
8	TG0003-17304	HELMET HOOK	1		
9	W5326007	FLANGE BOLT GB5787 6*18	1		
10	TG0003-02099	BUSHING	1		
11	VH0116-01065A	FRONT COVER BUSHING	2		
12	VH0116-01068	FRONT COVER RUBBER SLEEVE	2		
13	ZGK998-010992-0060	STAINLESS STEEL INNER HEXAGON SCREW 6*33	2		
14	/	CENTER RACK	1		
15	VHC997-01108	SELF-THREADING SCREW ST4.2*9	2		
16	VGB001-011121	SELF-THREADING SCREW 4.8*12	4		
17	NW5311311	SELF-THREADING SCREW ST4.2*12 (ϕ11)	6		
18	VI0149-17101	DRAIN HOLE RUBBER SLEEVE	2		
19	VH0078-17017	FRONT MUD LINER SLEEVE	1		